CITY OF ANTIOCH

CONSTRUCTION

DETAILS

Updated June 2, 2014

Also available on our website:

http://www.ci.antioch.ca.us/CityGov/CommDev/Engineering/docs/Construction-Details.pdf

CONSTRUCTION DETAILS

CD-21	WATER VALVE BOX
CD-22A	FIRE HYDRANT INSTALLATION
CD-22B	FIRE HYDRANT INSTALLATION
CD-23	SEWER LATERAL CLEANOUT DETAIL
CD-23A	SEWER LATERAL CLEANOUT WITH BACKWATER OVERFLOW
CD-23B	SEWER LATERAL CLEANOUT WITH SEWER POPPER BACKWATER OVERFLOW DEVICE
CD-24	STANDARD STREET BARRICADE – TYPE 1
CD-25	STANDARD DRIVEWAY APPROACH (RESIDENTIAL)
CD-25A	STANDARD DRIVEWAY APPROACH (COMMERCIAL)
CD-26	STANDARD SIDEWALK AND INTEGRAL CURB AND GUTTER
CD-26A	STANDARD MEDIAN SPILL CURB
CD-27	STANDARD MONUMENT INSTALLATION
CD-28	STANDARD REINFORCED CONCRETE MANHOLE – TYPE II
CD-28A	STANDARD REINFORCED CONCRETE MANHOLE – TYPE III
CD-28B	STANDARD REINFORCED CONCRETE DROP MANHOLE
CD-29B	STANDARD CATCH BASIN – TYPE "C" (BICYCLE GRATE)
CD-29C	STANDARD DOUBLE CATCH BASIN – TYPE "C" (BICYCLE GRATE)
CD-30	STANDARD WATER MAIN BLOW-OFF ASSEMBLY
CD-30A	STANDARD IN-LINE WATER MAIN BLOW-OFF ASSEMBLY
CD-31A	STANDARD CUL-DE-SAC TURNING BULB
CD-32	STANDARD RODDING INLET – TYPE I

CONSTRUCTION DETAILS
(CONT'D)

CD-33	STANDARD VALLEY GUTTER – TYPE I
CD-34	TYPICAL STREET SECTION PAVEMENT CROWN
CD-35	STANDARD MONOLITHIC SIDEWALK, CURB AND GUTTER
CD-36	STANDARD SANITARY SEWER LATERAL REPAIR
CD-40	WATER SERVICE LATERAL – COMPRESSION CONNECTIONS
CD-40A	WATER SERVICE LATERAL CONNECTION FOR RESIDENTIAL FIRE SPRINKLER SYSTEMS
CD-41	AIR & VACUUM RELIEF VALVE DETAIL
CD-42	ANCHOR BLOCK DETAIL FOR END OF LINE VALVES
CD-43	STANDARD JUNCTION BOX DETAIL
CD-44	SACKED CONCRETE HEADWALL DETAIL
CD-45	MANHOLE DETAIL – 48" AND UNDER, CAST IN PLACE CONCRETE PIPE
CD-46	MANHOLE DETAIL – 52" AND OVER, CAST IN PLACE CONCRETE PIPE
CD-47	PUMP STATION CHECK VALVE ASSEMBLY
CD-47A	PRESSURE REGULATING STATION
CD-48	SEWER LATERAL WYE INSTALLATION
CD-49	SEWER MAIN LATERAL TAP
CD-53	CHAIN LINK FENCE DETAIL
CD-54	4'-6" x 8'-6" CONCRETE VAULT FULL TRAFFIC WITH 6" WALLS
CD-55	REDUCED PRESSURE BACKFLOW PREVENTER ASSEMBLY
CD-56	STANDARD SIDEWALK RAMP FOR PHYSICALLY HANDICAPPED

CONSTRUCTION DETAILS
(CONT'D)

CD-57	TRENCH EXCAVATION AND BACKFILL IN EXISTING PAVEMENT
CD-58	MINIMUM THRUST BLOCK SIZES
CD-59	PATH GUARD POSTS
CD-60	TREE STAKING DETAIL
CD-61	MAIL BOX INSTALLATION
CD-62	TYPICAL SIDEWALK WIDENING
CD-63A	STANDARD STREET NAME SIGN INSTALLATION
CD-63B	STANDARD STREET NAME SIGN LOCATIONS
CD-64A	PEDESTAL IRRIGATION CONTROLLER
CD-64B	SPRINKLER LATERAL DETAIL
CD-64C	QUICK COUPLER MAIN LINE (NON-POTABLE)
CD-64D	QUICK COUPLER MAIN LINE (POTABLE)
CD-64E	LIGHT ENERGIZED IRRIGATION CONTROLLER
CD-65	PLAY AREA CURB SECTION
CD-66	DOUBLE DETECTOR CHECK VALVE, 4-INCH TO 10-INCH WITH DOUBLE DETECTOR CHECK FIRE LINE BACKFLOW
CD-67	WATER QUALITY SAMPLER
CD-69	WATER SERVICE INSTALLATION POLICY
CD-70	SEWER SERVICE INSTALLATION POLICY
CD-71	SHRUB & TREE PLANTING ON SLOPE
CD-72	MASTER CONTROL VALVE

CONSTRUCTION DETAILS
(CONT'D)

CD-73	REMOTE CONTROL VALVE
CD-74	ISOLATION GATE VALVE – 2" AND UNDER
CD-75	ISOLATION GATE VALVE – 2 1/2" AND OVER
CD-76	TRENCH SECTIONS FOR IRRIGATION PIPE
CD-77	TYPICAL THRUST BLOCK INSTALLATIONS FOR IRRIGATION ONLY
CD-78	UTILITY CLEARANCE POLICY
CD-79	ELECTROLIER DETAIL

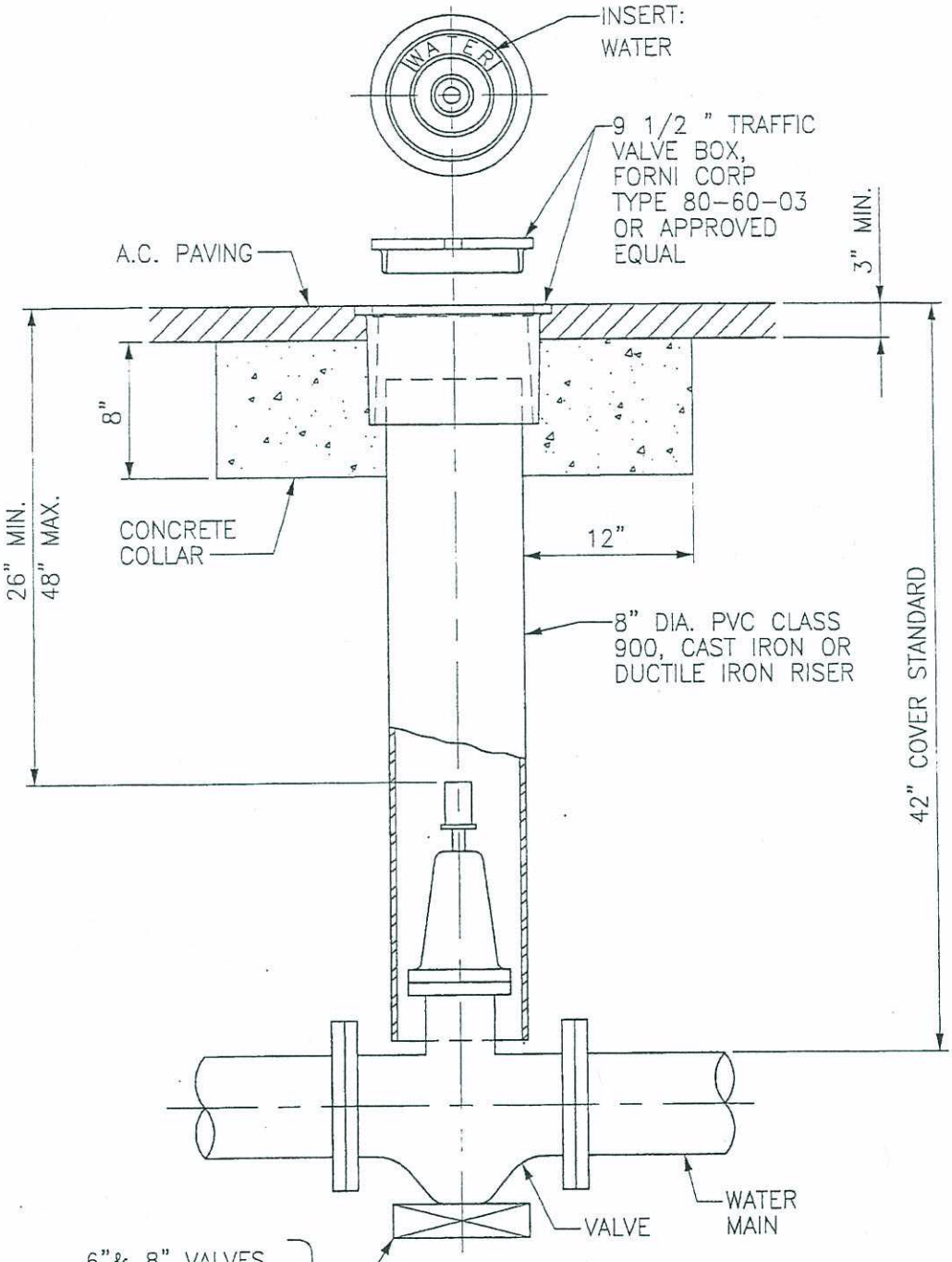

6"& 8" VALVES
2"x8"x24"
REDWOOD BLOCK

10" & ABOVE
4"x12"x12"
CONCRETE PAD

NOTES:

WHEN THE CITY ENGINEER REQUIRES THAT A VALVE BOX BE ADJUSTED, THE PAVEMENT WILL BE NEATLY CUT IN A CIRCLE 8" FROM THE EDGE OF THE VALVE BOX

DEPARTMENT OF PUBLIC WORKS
ENGINEERING SERVICES CITY OF ANTIOCH

DRAWN BY: S. Rodriguez	WATER VALVE BOX	APPROVED BY:
REVISIONS:		J.G. BRANDT R.C.E. 26870 EXP. 3/31/01
	CD-21	CITY ENGINEER DATE: 9/1/00

p:\pw standard drawings\cd-21.dwg

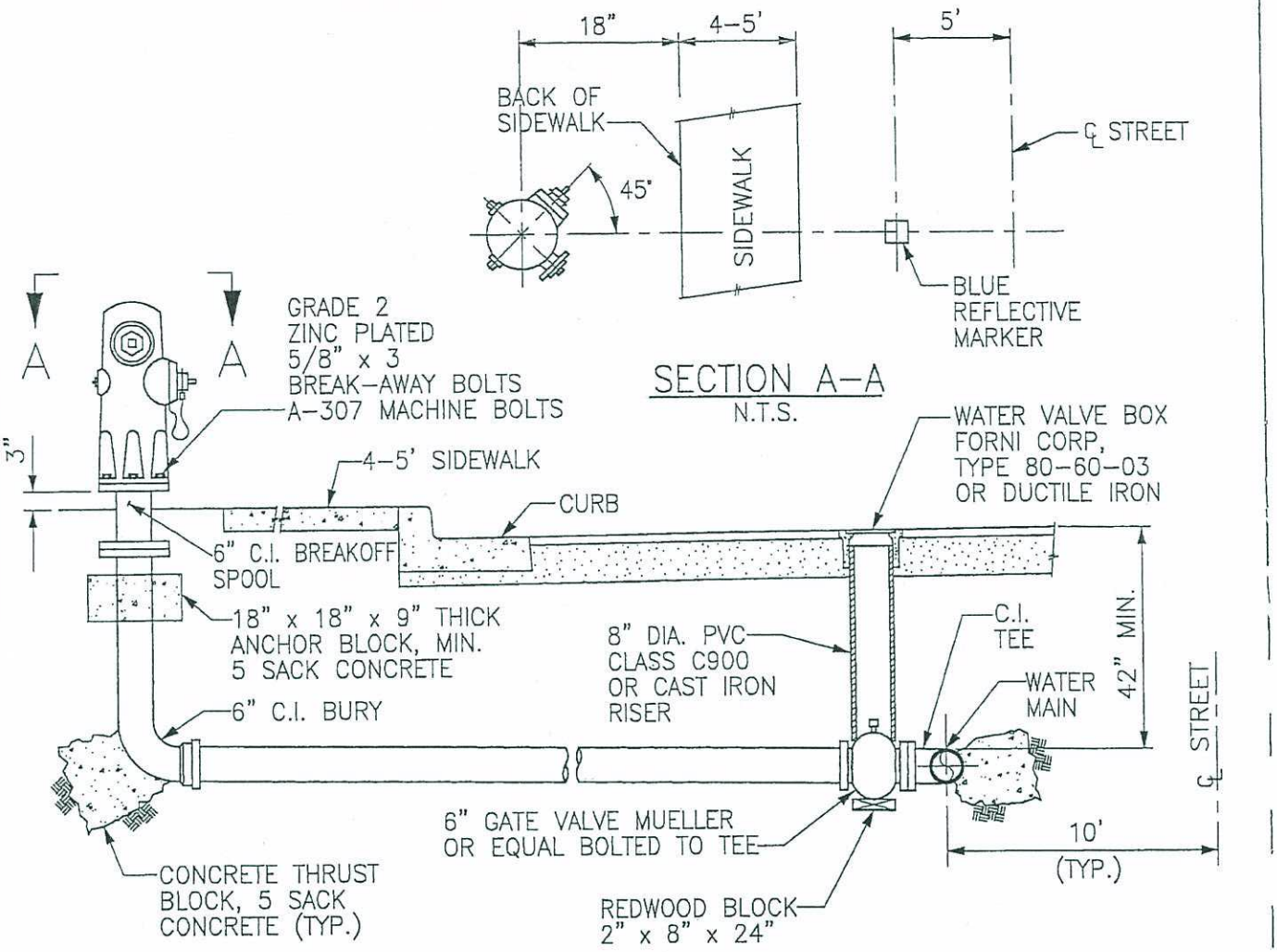

FIRE HYDRANT FOR RESIDENTIAL AREA WITH 4-5' SIDEWALK

2 1/2 " & 4 1/2 " HOSE OUTLETS EAST BAY TYPE BY RICH VALVE CO. MODEL 5; MUELLER CO. A-450 OR RICH RANGER 950 AS ALTERNATE, OR LONG BEACH IRON WORKS MODEL 611 OR 614.

NOTES:

1. ALL HOSE OUTLET CAPS SHALL BE ATTACHED TO HYDRANT BY CHAIN.
2. HYDRANT SHALL BE IN ACCORDANCE WITH AWWA STANDARDS; TESTED AND APPROVED BY UNDERWRITERS LABORATORIES, OR EQUIVALENT.
3. FIRE HYDRANT AND EXPOSED BREAKOFF SPOOL INSTALLED SHALL BE PAINTED WHITE AS REQUIRED BY THE CITY OF ANTIOCH. KELLY-MOORE KELGAURD #1700 ARTIC WHITE #61 OR EQUAL.
4. TWO WAY BLUE REFLECTIVE MARKER TO BE INSTALLED 5 FT. FROM STREET CENTERLINE TOWARD FIRE HYDRANT.
5. INSTALL TRACER WIRE ALONG MAIN LINE TO COME UP IN ALL VALVE BOXES.

DEPARTMENT OF PUBLIC WORKS
ENGINEERING SERVICES CITY OF ANTIOCH

DRAWN BY: S. Rodriguez	FIRE HYDRANT INSTALLATION	APPROVED BY:
REVISIONS:		J.G. BRANDT CITY ENGINEER
	CD-22A	DATE: 4/22/04

p:\pw standard drawings\cd-22a.dwg

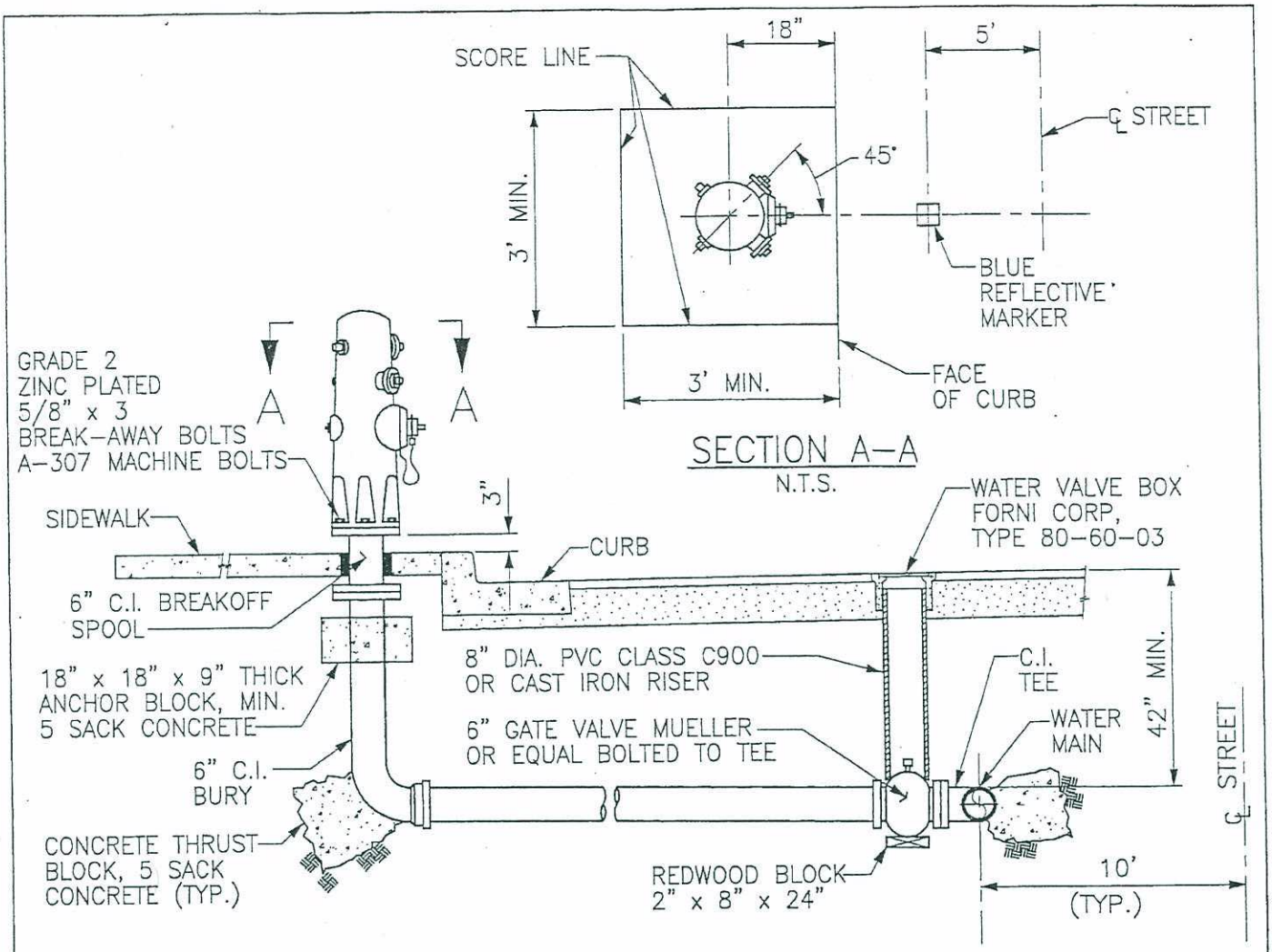

FIRE HYDRANT FOR COMMERCIAL, INDUSTRIAL AND RESIDENTIAL, WITH SIDEWALKS GREATER THAN 6' OR WITH DETACHED SIDEWALK.

2, 2 1/2 " & 1, 4 1/2 " HOSE OUTLETS THE RICH RANGER 960, OR LONG BEACH ANACAPA 615 PROVIDED LOWEST VALVE CENTER IS 13 7/8 " OR MORE ABOVE BASE FLANGE.

NOTES:

1. ALL HOSE OUTLET CAPS SHALL BE ATTACHED TO HYDRANT BY CHAIN.
2. HYDRANT SHALL BE IN ACCORDANCE WITH AWWA STANDARDS; TESTED AND APPROVED BY UNDERWRITERS LABORATORIES, OR EQUIVALENT.
3. FIRE HYDRANT AND EXPOSED BREAKOFF SPOOL INSTALLED SHALL BE PAINTED WHITE AS REQUIRED BY THE CITY OF ANTIOCH. KELLY-MOORE KELGAURD #1700 ARTIC WHITE #61 OR EQUAL.
4. TWO WAY BLUE REFLECTIVE MARKER TO BE INSTALLED 5 FT. FROM STREET CENTERLINE TOWARD FIRE HYDRANT.
5. INSTALL TRACER WIRE ALONG MAIN LINE TO COME UP IN ALL WATER VALVE BOXES.

DEPARTMENT OF PUBLIC WORKS
ENGINEERING SERVICES CITY OF ANTIOCH

DRAWN BY: S. Rodriguez	FIRE HYDRANT INSTALLATION	APPROVED BY:
REVISIONS:		J.G. BRANDT
		CITY ENGINEER
	CD-22B	DATE: 6/9/04

r:\pw standard drawings\cd-22b.dwg

NOTE: ALL SANITARY SEWER LATERALS THAT REQUIRE A BACKWATER DEVICE MUST BE INSTALLED AS SHOWN ON CD-23A.

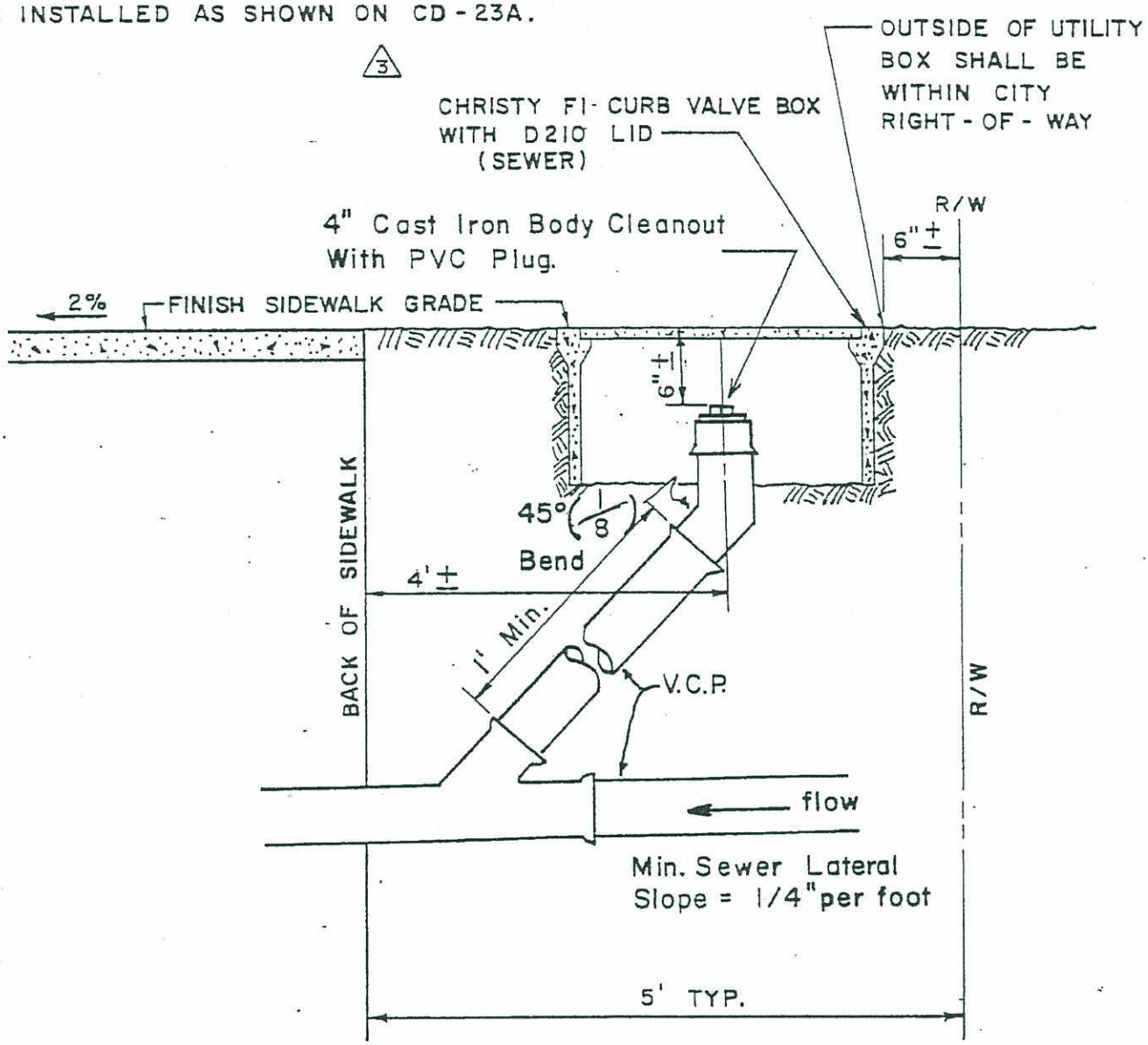

PUBLIC WORKS DEPARTMENT

ENGINEERING SERVICES — CITY OF ANTIOCH, CALIFORNIA

Drawn by D L M Date 8-19-70 Revised 1. 2-20-75 T.S. Revised 2. 8-22-89 3. 6-19-92	SEWER LATERAL CLEANOUT DETAIL CD-23	APPROVED BY S.E. Davis S.E. Davis R.E. 14298 5-1-75 Lic. Exp. 3-31- City Engineer

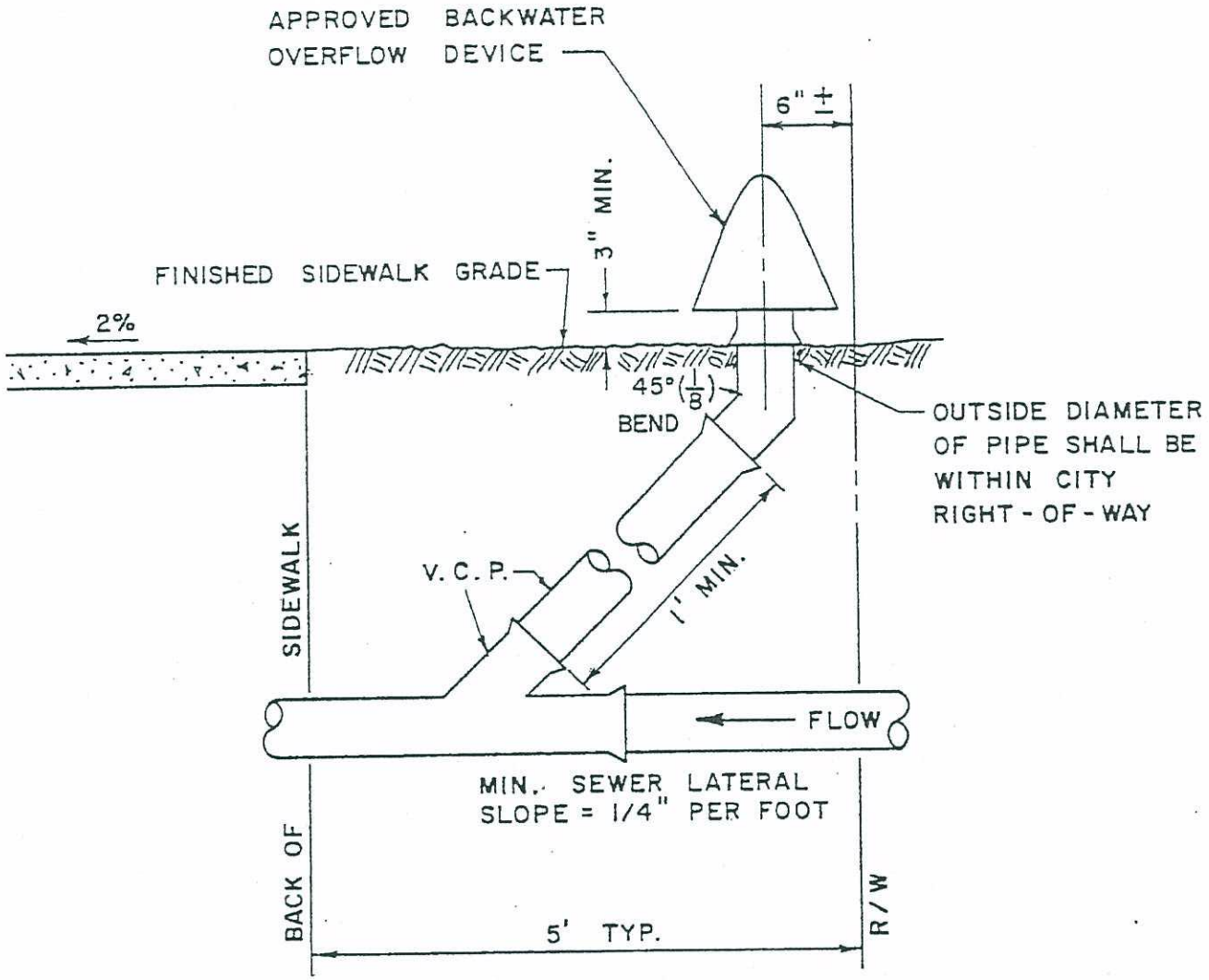

DEPARTMENT OF PUBLIC WORKS

ENGINEERING SERVICES CITY OF ANTIOCH CALIFORNIA

Drawn by: JV Revised	SEWER LATERAL CLEANOUT WITH BACKWATER OVERFLOW DETAIL CD - 23A	Approved by: S. E. Davis R.E. 14298 City Engineer Exp 3-31-93 Date: 6-24-92

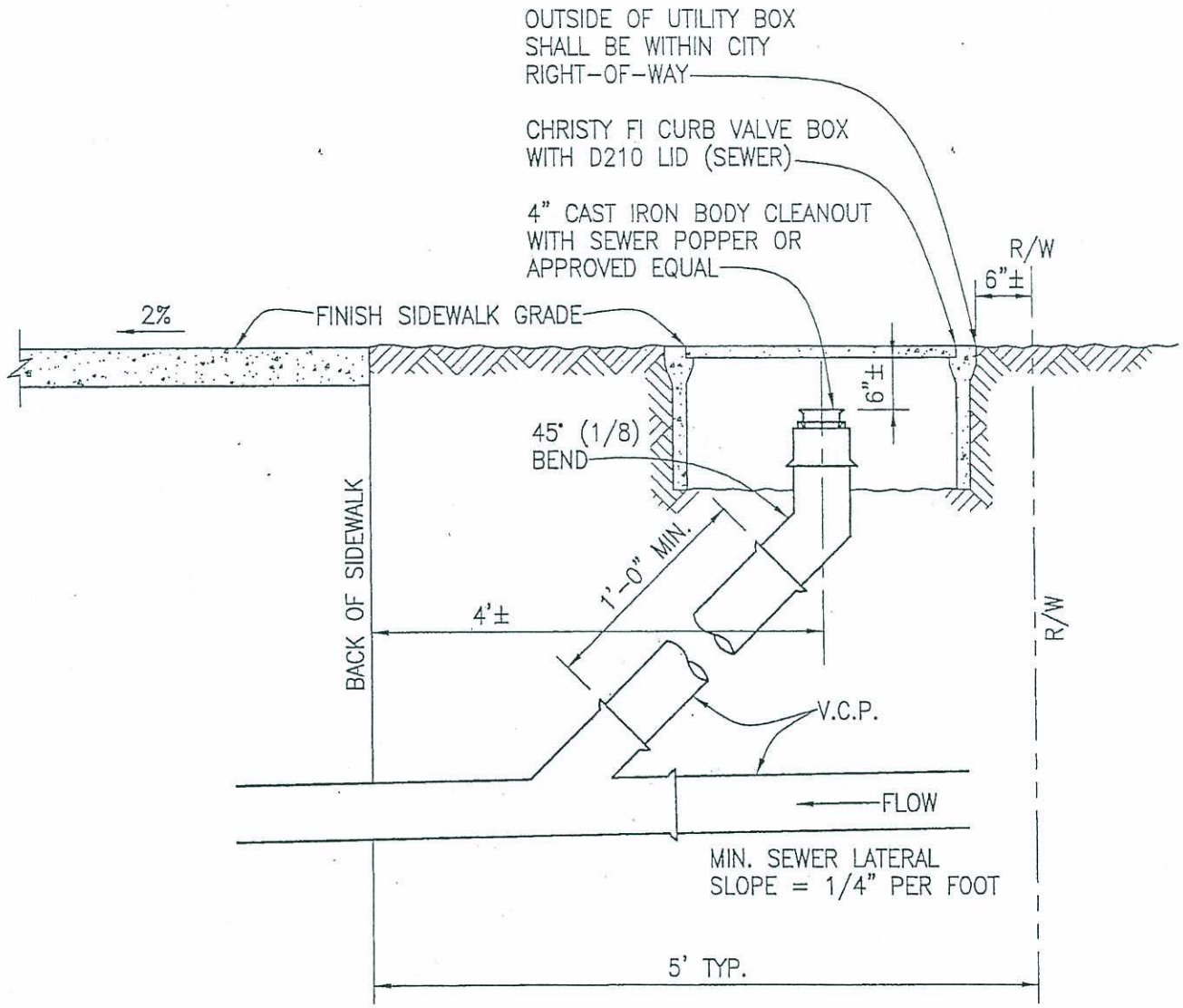

REGISTERED PROFESSIONAL ENGINEER
JOSEPH G. BRANDT
NO. C26870
EXP. 3/31/09
CIVIL
STATE OF CALIFORNIA

DEPARTMENT OF PUBLIC WORKS
ENGINEERING SERVICES CITY OF ANTIOCH

DRAWN BY: S. Rodriguez	**SEWER LATERAL CLEANOUT WITH SEWER POPPER BACKWATER OVERFLOW DEVICE**	APPROVED BY:
REVISIONS:		J.G. BRANDT CITY ENGINEER
	CD – 23B	DATE: 8/16/07

p:\pw standard drawings\cd-23b.dwg

BARRICADE SHALL BE CONSTRUCTED FROM 2-2 X 6 D.F. CROSS MEMBERS NAILED TOGETHER & BOLTED TO THE POSTS WITH 1/2" DIA. X 10' LONG M.B.s & C.W.s POSTS SHALL BE 4X6 R.W. 5' LONG EXCEPT THE CENTER POST, WHICH SHALL BE 8' LONG. THE CENTER POST SHALL HAVE ONE 18" X 18" TYPE N-2 REFLECTOR. THE BARRICADE SHALL RECEIVE TWO COATS OF WHITE PAINT. WARNING SIGNS SHALL BE PER STATE OF CALIF., DEPARTMENT OF TRANSPORTATION SPECIFICATIONS.

BARRICADES SHALL BE CONSTRUCTED AT THE END OF PAVEMENT.

LOCKS TO BE FURNISHED & INSTALLED BY CITY & PAID FOR BY DEVELOPER.

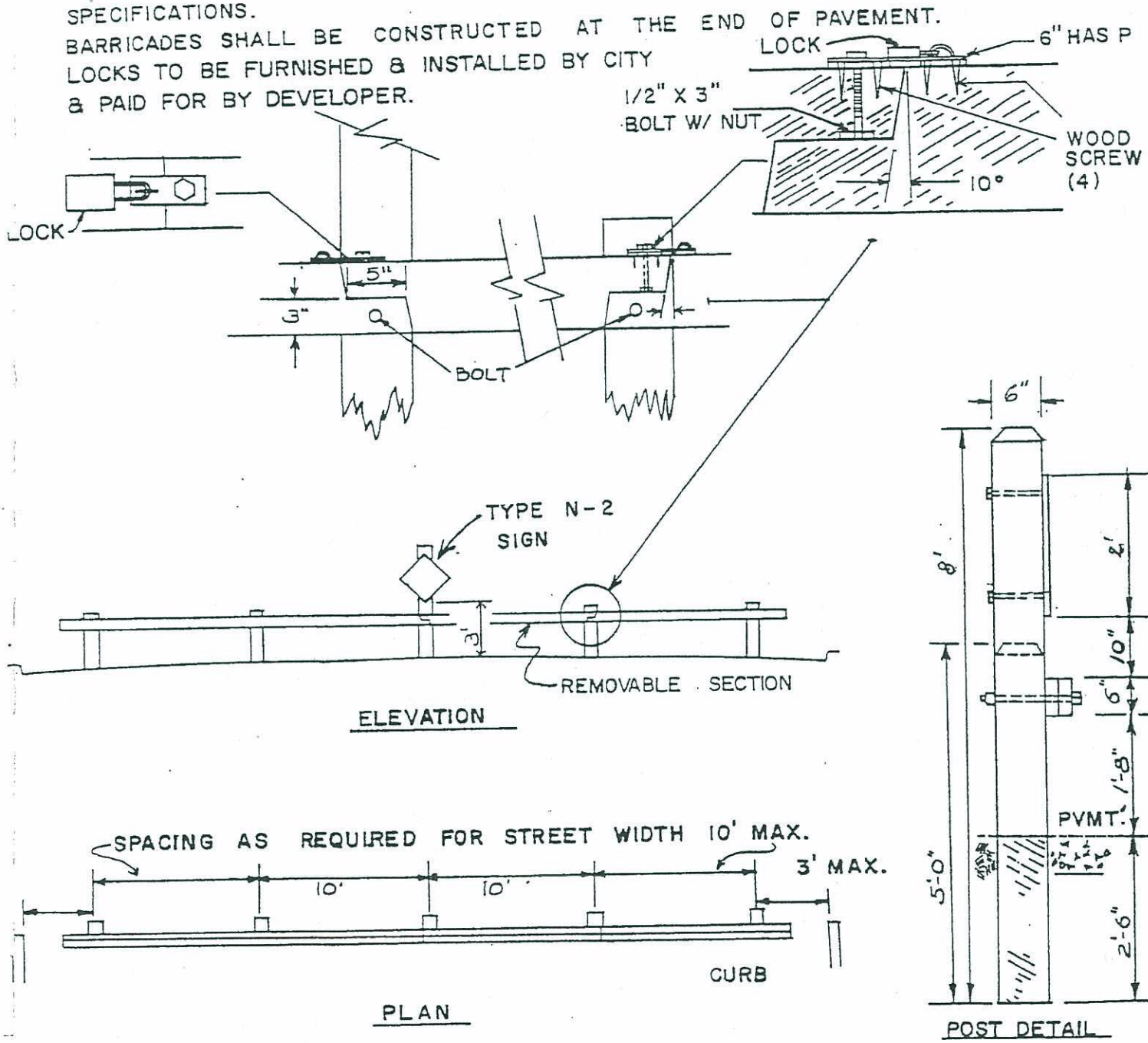

COMMUNITY DEVELOPMENT DEPARTMENT

DIVISION OF ENGINEERING CITY OF ANTIOCH, CALIFORNIA

DRAWN BY DLM JULY 1971 REVISED 5-8-75 TS	REVISED LB 7/8/77	STANDARD STREET BARRICADE TYPE I
		CD—24
APPROVED BY S.E. DAVIS R.E 14298 CITY ENGINEER		

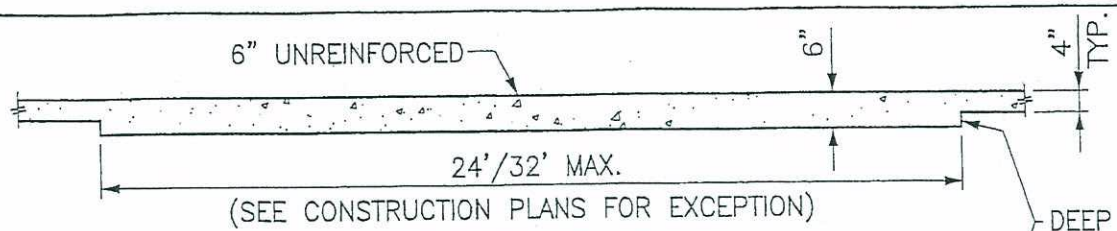

SECTION C–C

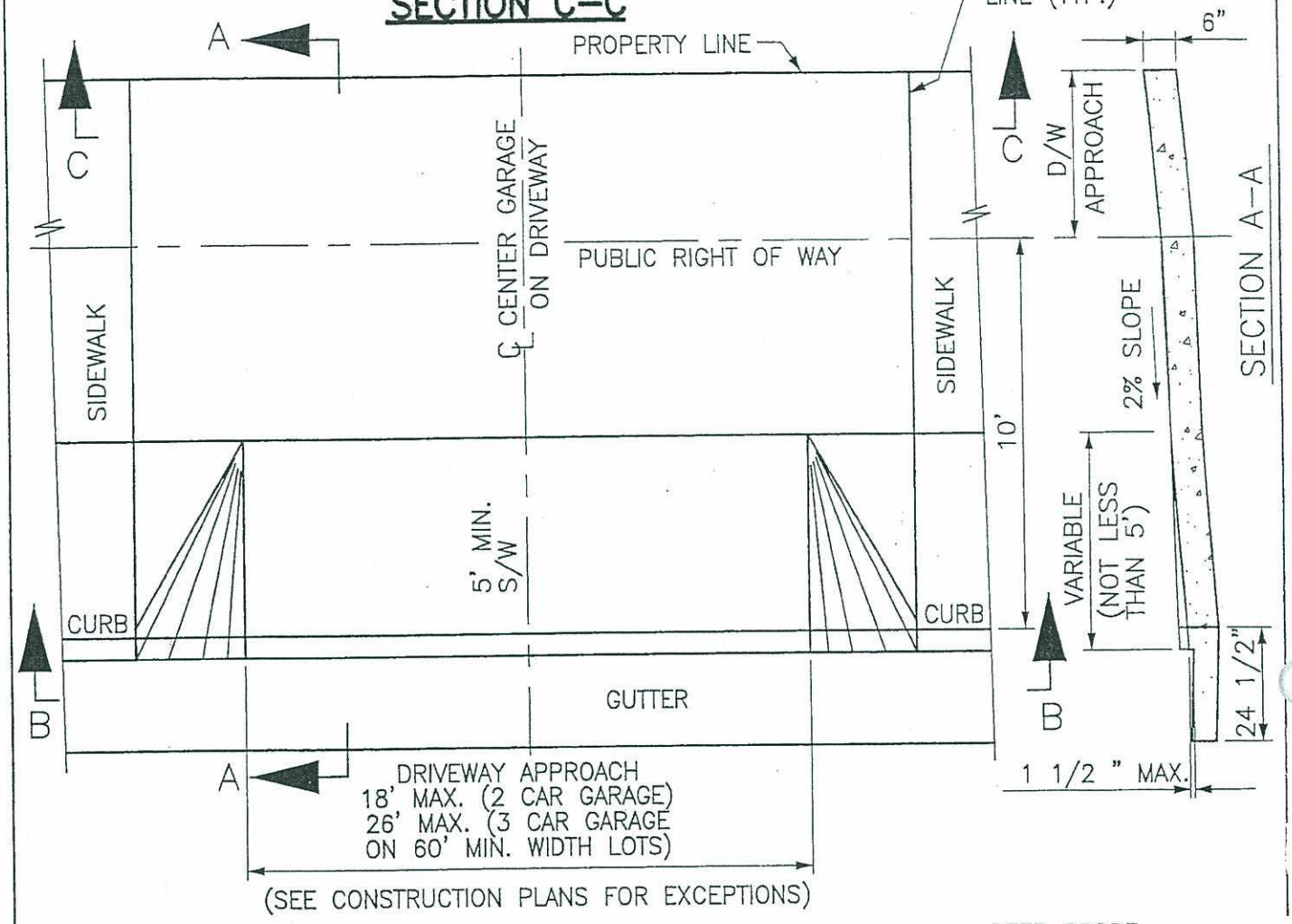

PLAN

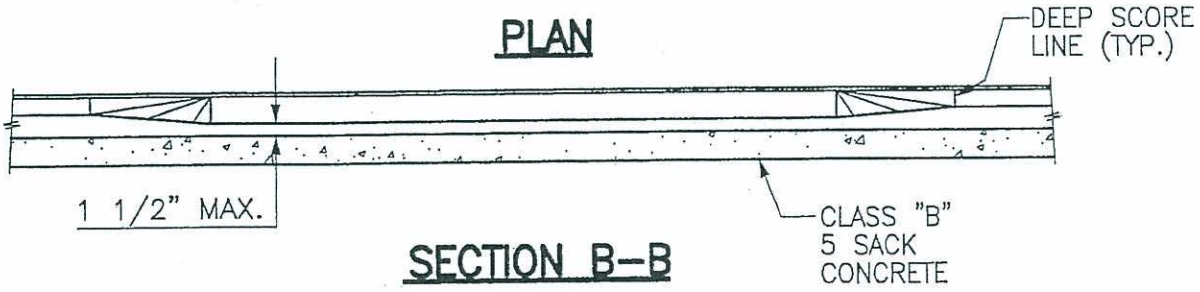

SECTION B–B

ENGINEERING SERVICES
CITY OF ANTIOCH

DRAWN BY: S. Rodriguez	STANDARD DRIVEWAY APPROACH (RESIDENTIAL)	APPROVED BY:
REVISIONS:		J.G. BRANDT CITY ENGINEER
	CD–25	DATE: 6/7/05

p:\pw standard drawings\cd-25.dwg

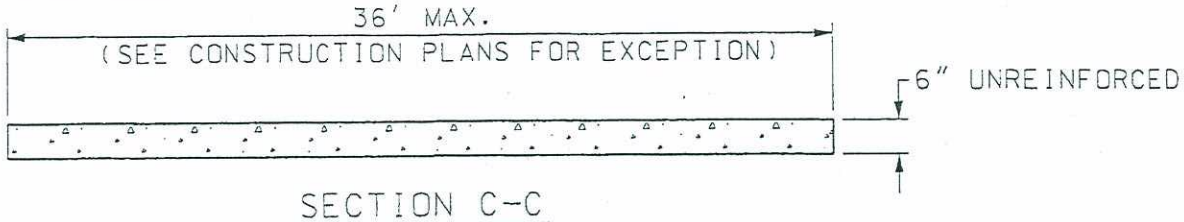

SECTION C-C

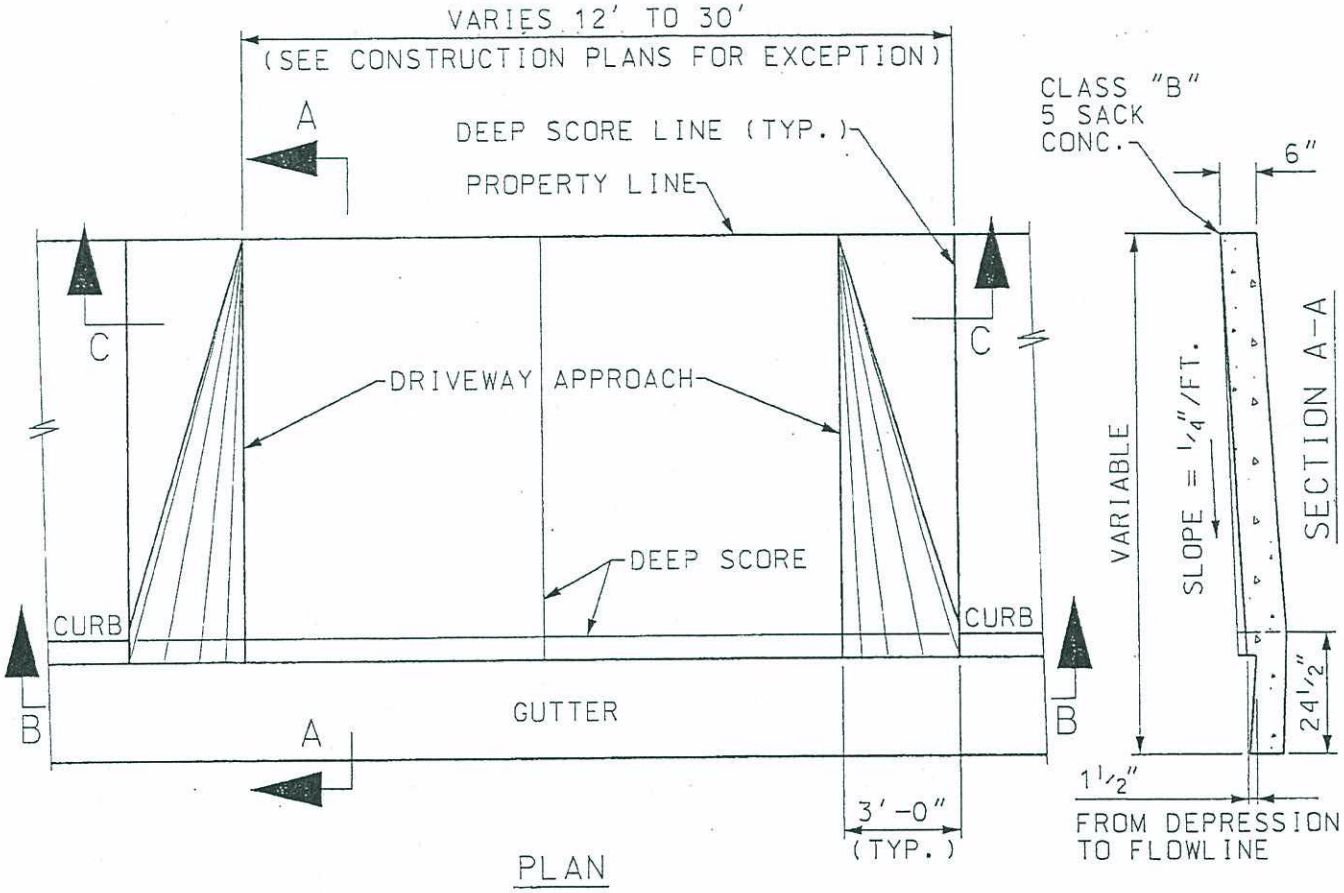

PLAN

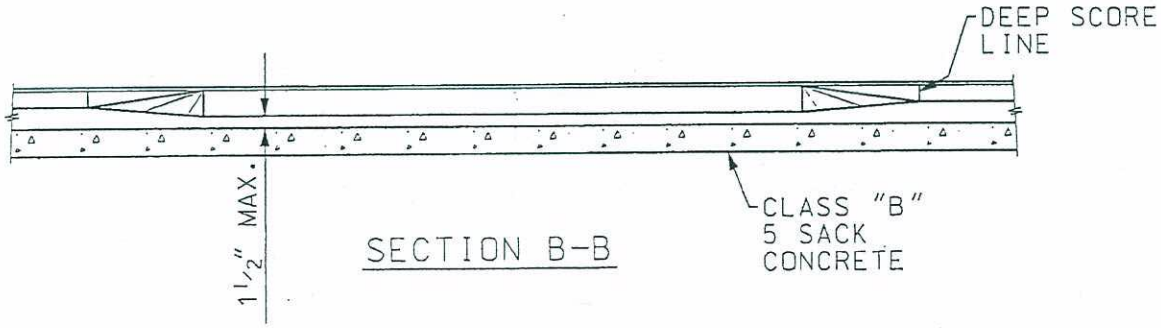

SECTION B-B

DEPARTMENT OF PUBLIC WORKS
ENGINEERING SERVICES CITY OF ANTIOCH

DRAWN BY: MAC REVISIONS:	STANDARD DRIVEWAY APPROACH (COMMERCIAL) CD-25A	APPROVED BY: J.G. BRANDT CITY ENGINEER DATE: 3/31/99

w:/STANDARDS/cd25a.dgn

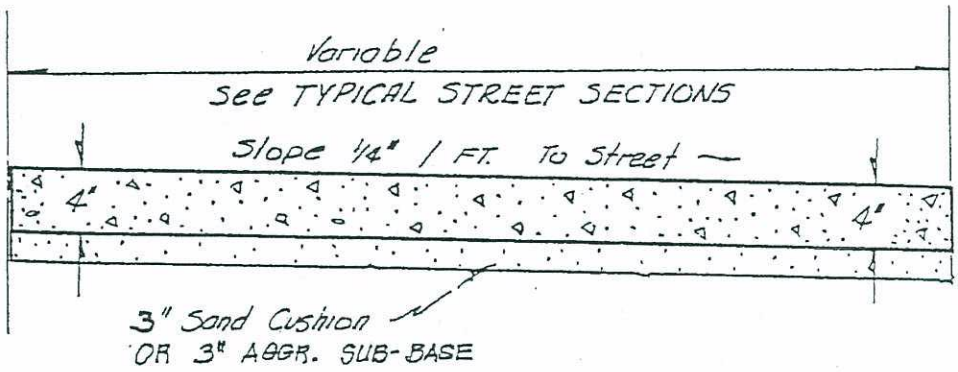

SIDEWALK

Scale 1" = 1.0'

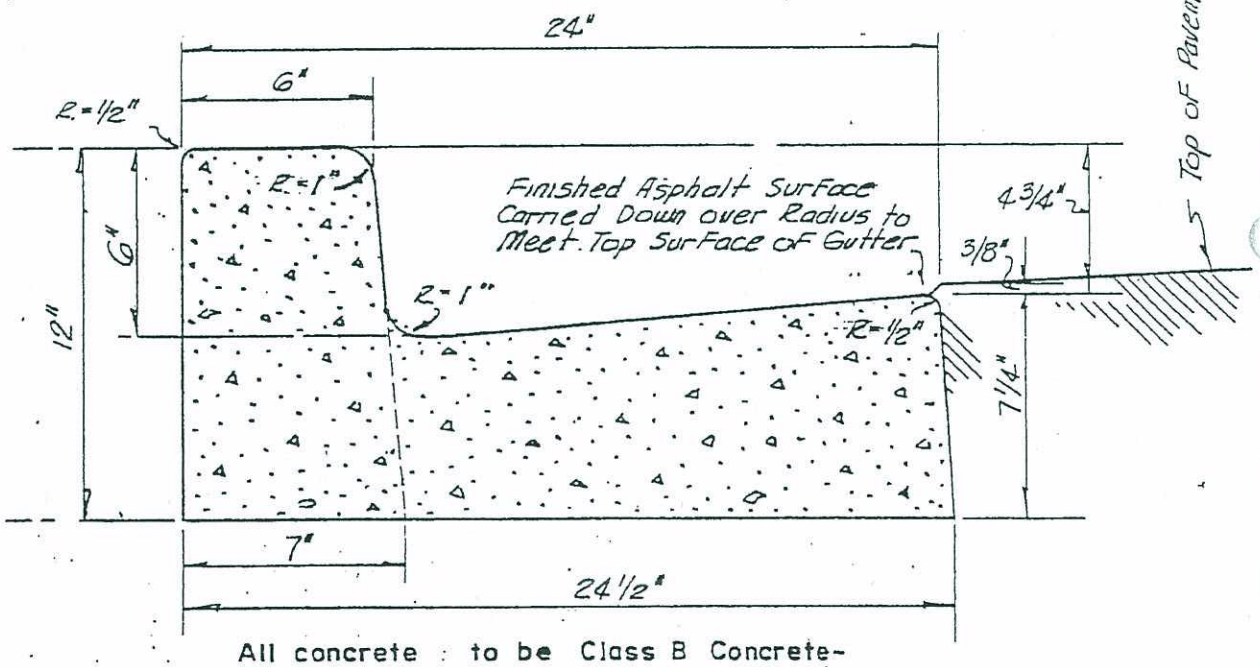

All concrete : to be Class B Concrete-
5 sack cement per cubic yard of concrete.

INTEGRAL CURB AND GUTTER

Scale 1" = 6"

COMMUNITY DEVELOPMENT DEPARTMENT
DIVISION OF ENGINEERING CITY OF ANTIOCH, CALIFORNIA

Drawn by J.Y. DATE Mar. 11, 1958 Revised 4-7-72 3-15-89	STANDARD SIDEWALK AND INTEGRAL CURB AND GUTTER CD - 26	APPROVED BY S.E. Davis S.E. DAVIS R.E. 14298 CITY ENGINEER DATE 5-1-72

Rev. 8-28-90

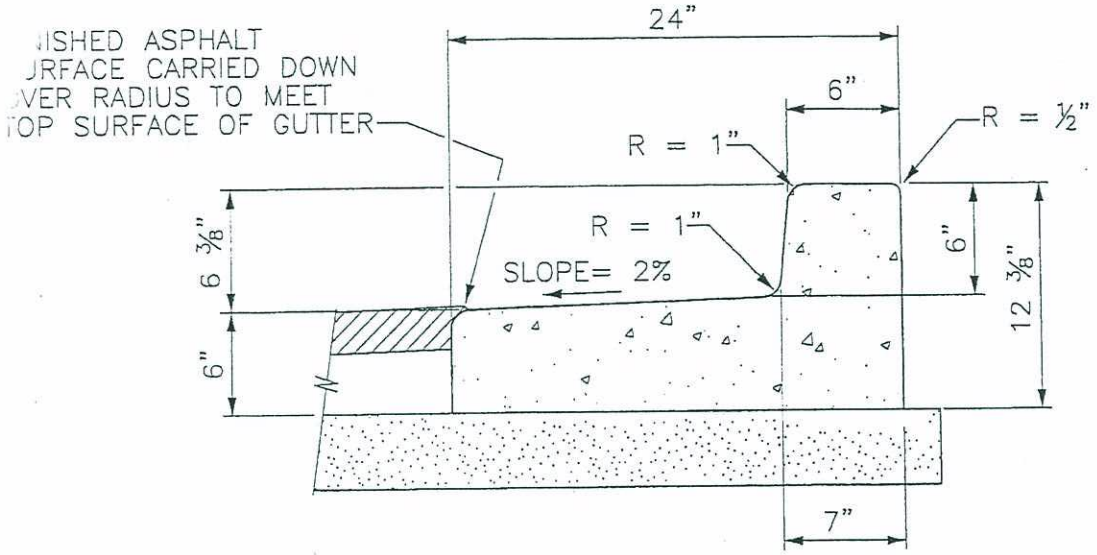

SPILL CURB

DEPARTMENT OF PUBLIC WORKS
ENGINEERING SERVICES CITY OF ANTIOCH

DRAWN BY: MAC	STANDARD MEDIAN SPILL CURB	APPROVED BY:
REVISIONS:		J.G. BRANDT R.C.E. 26870 EXP. 3/31/01
	CD-26A	CITY ENGINEER DATE: 9/1/00

p:\pw standard drawings\cd-26a.dwg

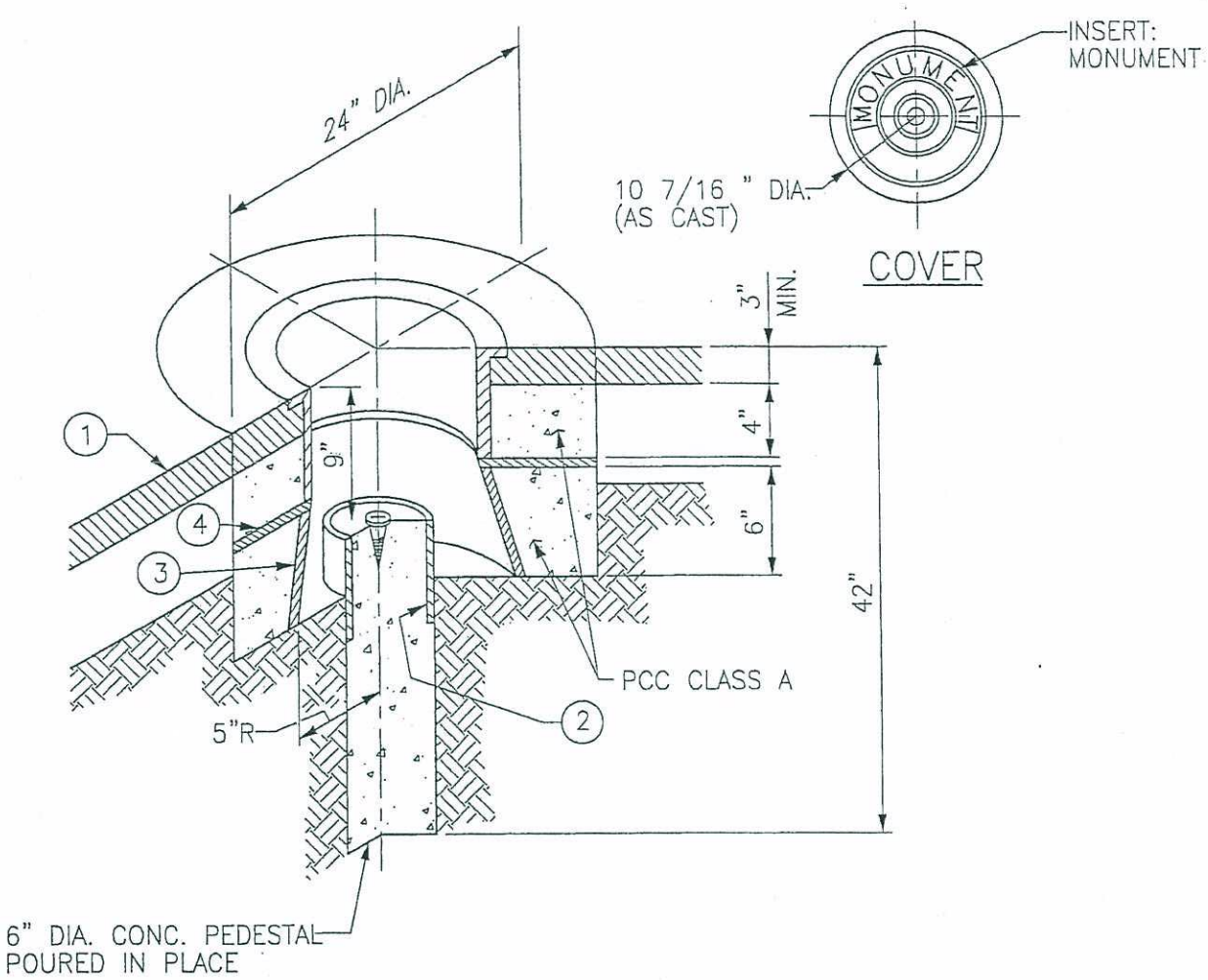

DUCTILE IRON FRAMES AND COVERS SHALL BE FORNI CORP., TYPE 80-60-03 VALVE BOX WITH "MONUMENT" COVER MARKINGS OR APPROVED EQUAL. MONUMENT INSTALLATION SHALL BE AS SHOWN. A SOLID BRASS SURVEY MARKER, 2 3/4" DIA. (ENGLISH BROTHERS OAKLAND, OR EQUAL) SHALL BE SET FIRMLY INTO THE CONCRETE, MARKED WITH AN "X" AND CENTER PUNCH AT THE TRUE POINT. MONUMENTS SHALL BE TAGGED TO SHOW THE SURVEYOR'S REGISTRATION NUMBER.

1. A.C. PAVEMENT.
2. 6" x 6" DIA. COLLAR FORMED OF 30# FELT.
3. TAPERED METAL CONE OF 3/32 " OR HEAVIER CHIPBOARD.
4. BOND BREAKER, 1/4 " OF FELT PAPER OR SAND OR DIRT.

A RECORD OF FINISHED MONUMENT ELEVATIONS SHALL BE FURNISHED TO THE CITY OF ANTIOCH BASED ON U.S.G.S., 1929, SEA LEVEL DATUM.

DEPARTMENT OF PUBLIC WORKS
ENGINEERING SERVICES CITY OF ANTIOCH

DRAWN BY: S. Rodriguez	STANDARD MONUMENT INSTALLATION	APPROVED BY:
REVISIONS:		J.G. BRANDT R.C.E. 26870 EXP. 3/31/01
	CD-27	CITY ENGINEER DATE: 9/1/00

p:\pw standard drawings\cd-27.dwg

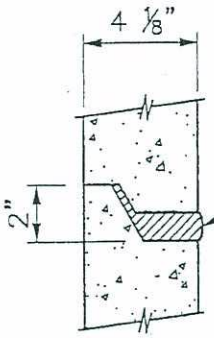

JOINT DETAIL

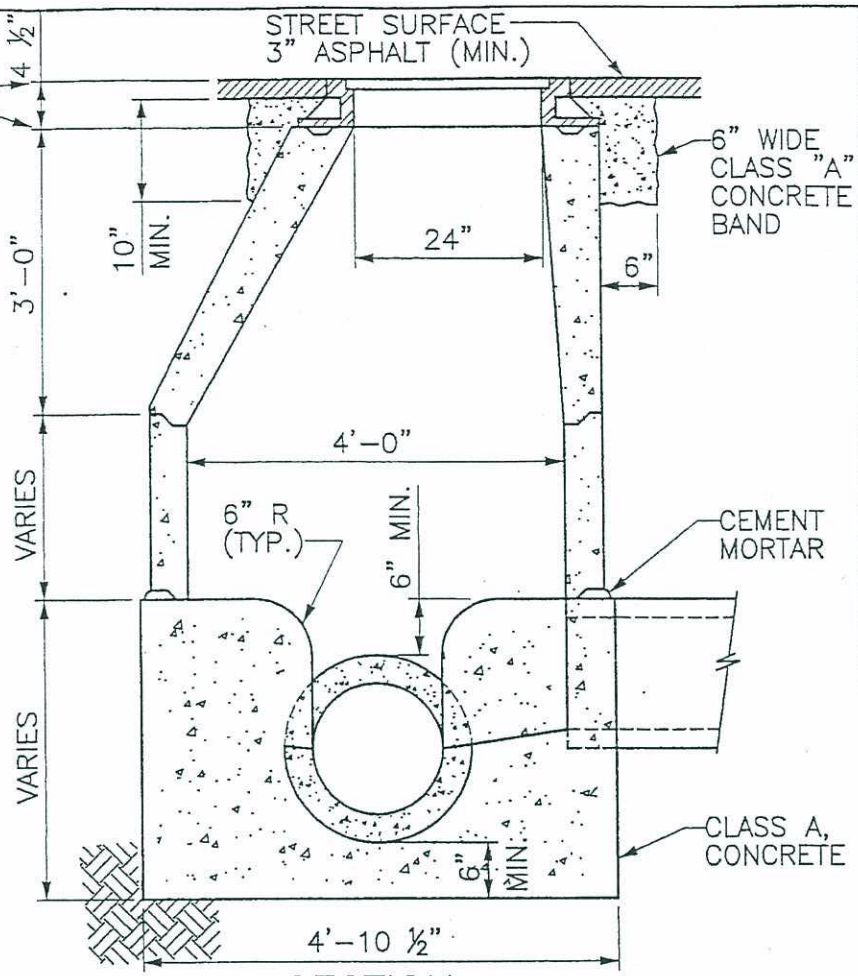

SECTION

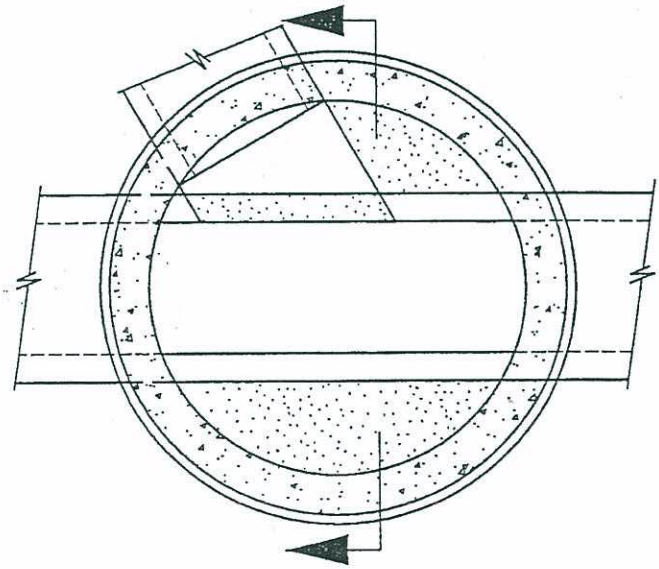

PLAN

NOTES:

1. PROVIDE ONE SET STANDARD STREET TYPE MANHOLE FRAME & COVER, D & L SUPPLY OR EQUAL A-1024.
2. MANHOLE FRAME TO BE SLOPED TO MATCH STREET GRADE.
3. MORTAR SHALL BE COMPOSED OF 1 PART PORTLAND CEMENT AND 2 PARTS SAND BY VOLUME.
4. ALL S.S.M.H. TO BE VACUUM TESTED.
5. PRECAST MANHOLE SECTIONS TO BE AS DESIGNATED BY A.S.T.M. SPEC. C-76-57 T. CLASS II

ENGINEERING SERVICES
CITY OF ANTIOCH

DRAWN BY: MAC	STANDARD REINFORCED CONCRETE MANHOLE TYPE II	APPROVED BY:
REVISIONS: 4/28/05		J.G. BRANDT CITY ENGINEER
	CD-28	DATE: 6/7/05

p:\pw standard drawings\cd-28.dwg

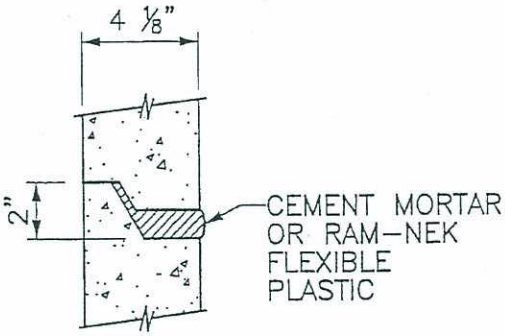

JOINT DETAIL

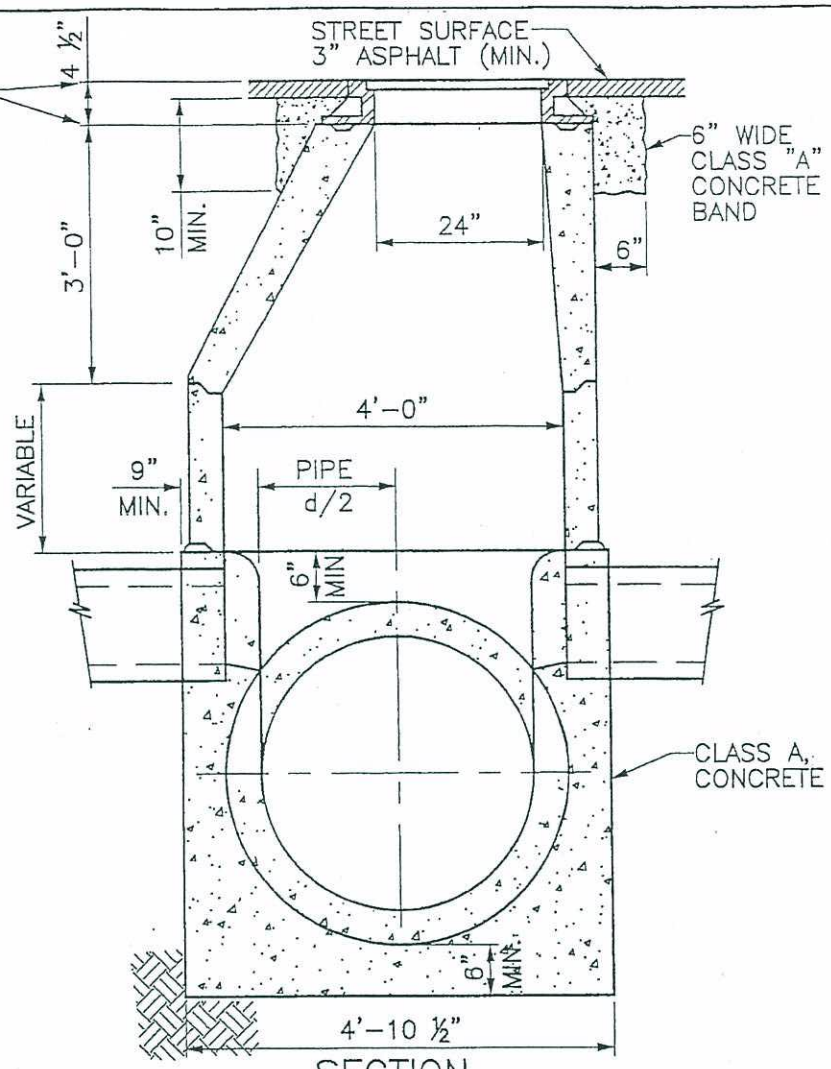

SECTION

NOTES:

1. PROVIDE ONE SET STANDARD STREET TYPE MANHOLE FRAME & COVER, D & L SUPPLY OR EQUAL A-1024.
2. MANHOLE FRAME TO BE SLOPED TO MATCH STREET GRADE.
3. MORTAR SHALL BE COMPOSED OF 1 PART PORTLAND CEMENT AND 2 PARTS SAND BY VOLUME.
4. ALL S.S.M.H. TO BE VACUUM TESTED.
5. PRECAST MANHOLE SECTIONS TO BE AS DESIGNATED BY A.S.T.M. SPEC. C-76-57 T. CLASS II

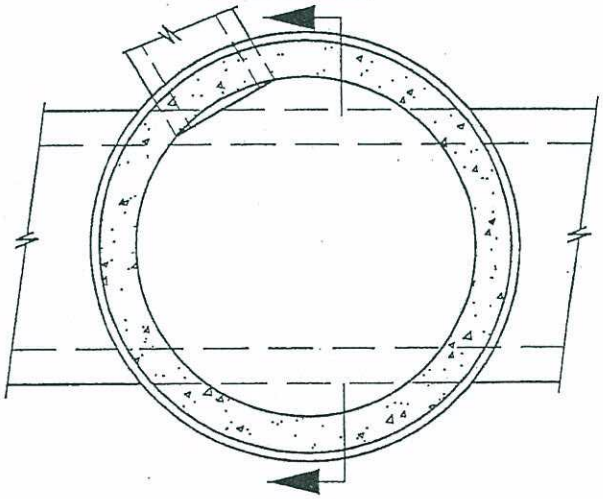

PLAN

ENGINEERING SERVICES
CITY OF ANTIOCH

DRAWN BY: MAC	STANDARD REINFORCED CONCRETE MANHOLE TYPE III	APPROVED BY:
REVISIONS: 4/28/05		J.G. BRANDT CITY ENGINEER
	CD-28A	DATE: 6/7/05

p:\pw standard drawings\cd-28a.dwg

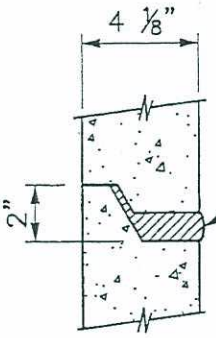

JOINT DETAIL

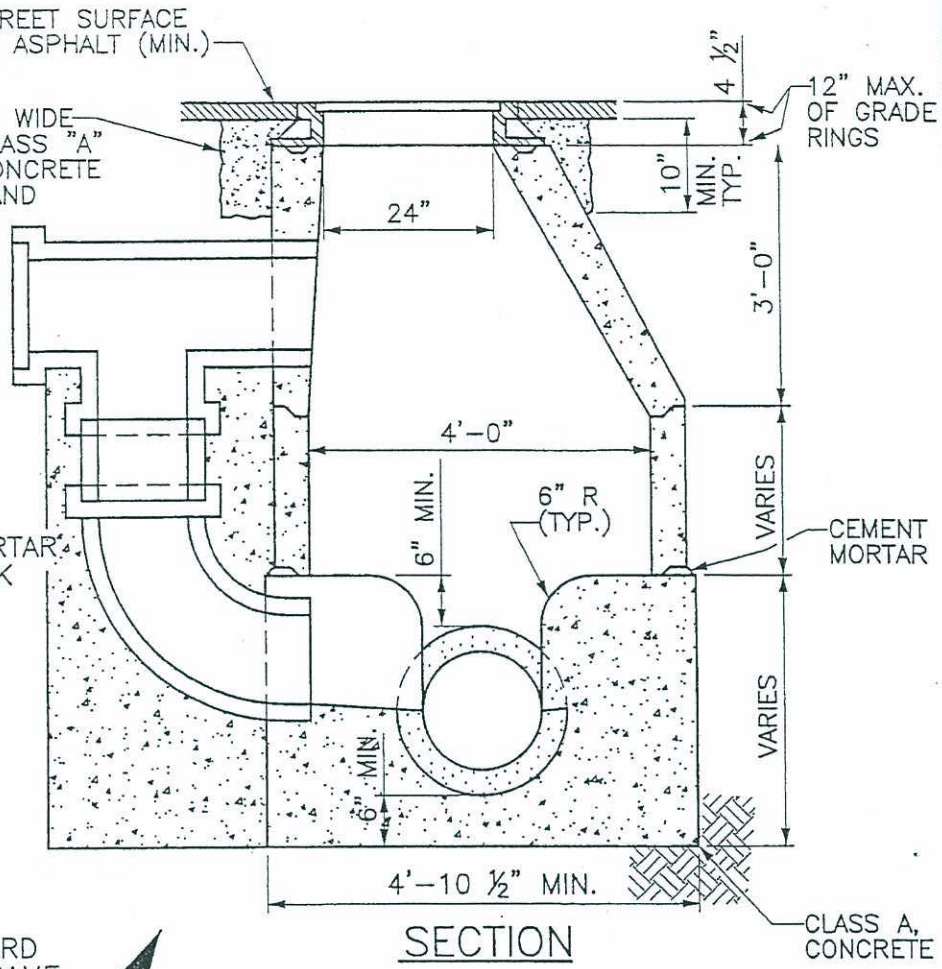

SECTION

NOTES:

1. PROVIDE ONE SET STANDARD STREET TYPE MANHOLE FRAME & COVER, D & L SUPPLY OR EQUAL A-1024.
2. MANHOLE FRAME TO BE SLOPED TO MATCH STREET GRADE.
3. MORTAR SHALL BE COMPOSED OF 1 PART PORTLAND CEMENT AND 2 PARTS SAND BY VOLUME.
4. ALL S.S.M.H. TO BE VACUUM TESTED.
5. PRECAST MANHOLE SECTIONS TO BE AS DESIGNATED BY A.S.T.M. SPEC. C-76-57 T. CLASS II

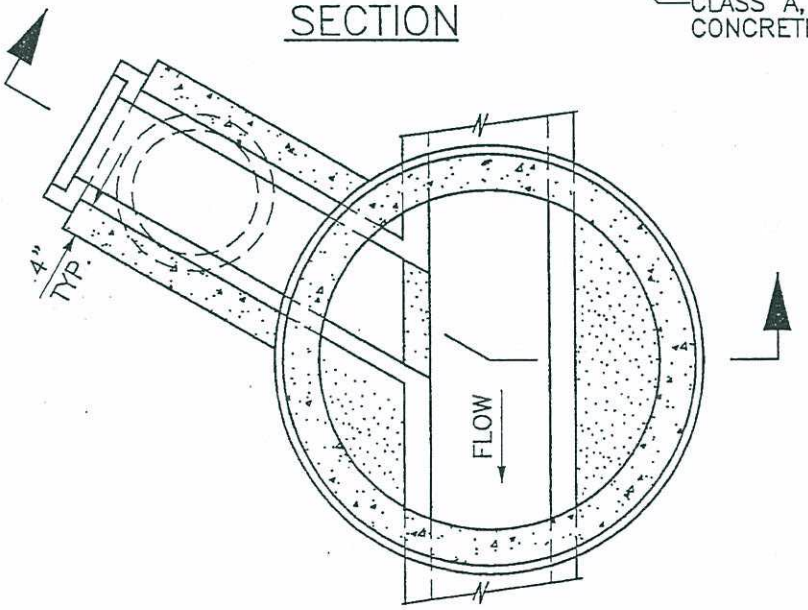

PLAN

ENGINEERING SERVICES
CITY OF ANTIOCH

DRAWN BY: MAC	STANDARD REINFORCED CONCRETE DROP MANHOLE	APPROVED BY:
REVISIONS: 4/28/05		J.G. BRANDT CITY ENGINEER
	CD-28B	DATE: 6/2/05

p:\pw standard drawings\cd-28b.dwg

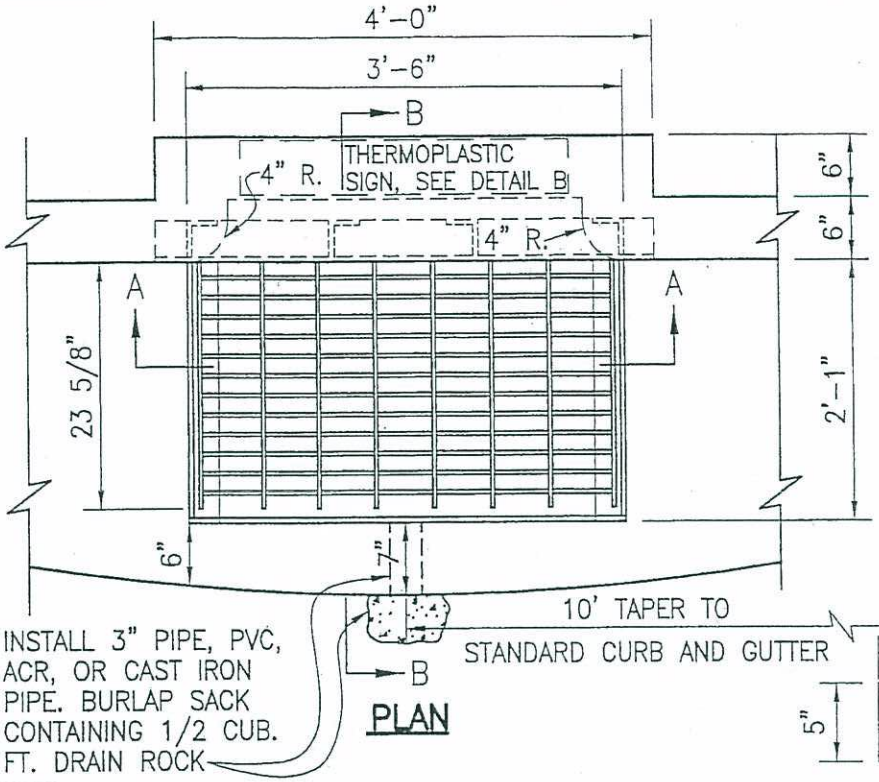

PLAN

STATE OF CALIFORNIA
24-12X GRATE (WELDED STEEL)

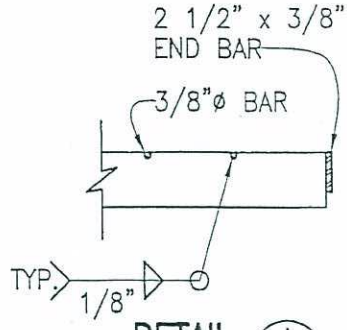

DETAIL A

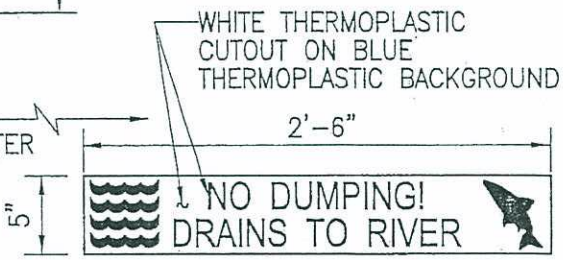

DETAIL B

NOTES:

1. ALL IRON WORK SHALL BE 1/2" GALVANIZED STEEL.
2. GRATES AND FRAMES SHALL BE BICYCLE TYPE.

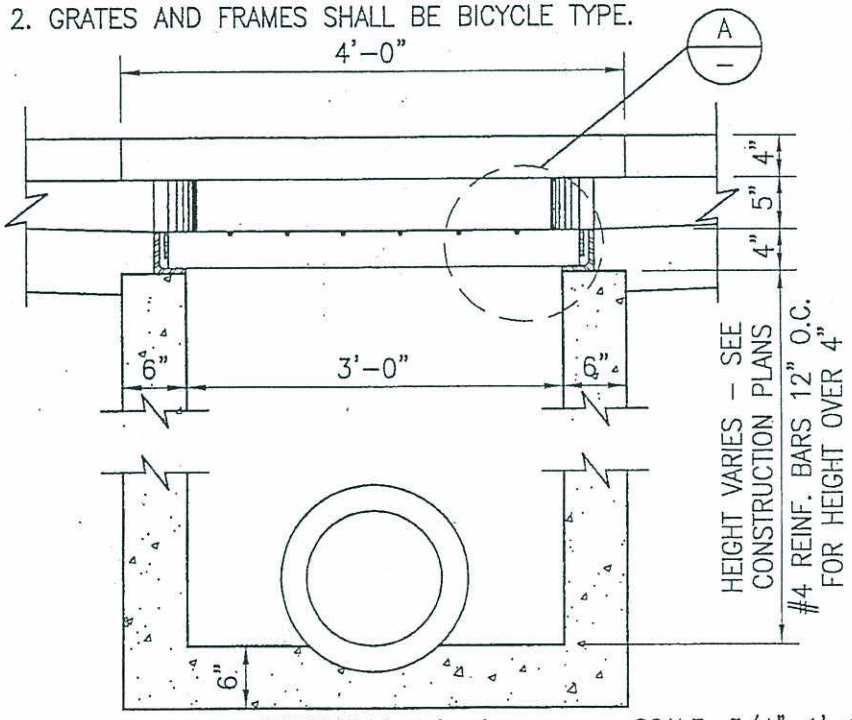

SECTION A-A

SCALE: 3/4"=1'-0"

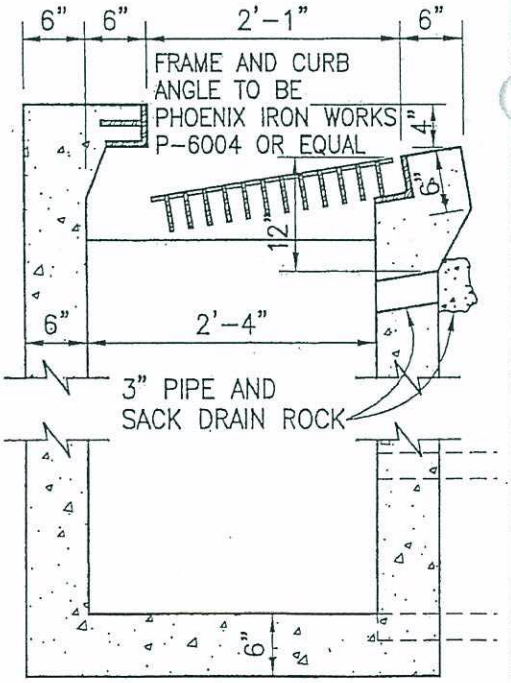

SECTION B-B

DEPARTMENT OF PUBLIC WORKS
ENGINEERING SERVICES CITY OF ANTIOCH

DRAWN BY: S. Rodriguez	STANDARD CATCH BASIN TYPE "C" (BICYCLE GRATE)	APPROVED BY:
REVISIONS:		J.G. BRANDT CITY ENGINEER
	CD - 29B	DATE: 6/7/05

p:\pw standard drawings\cd-29b.dwg

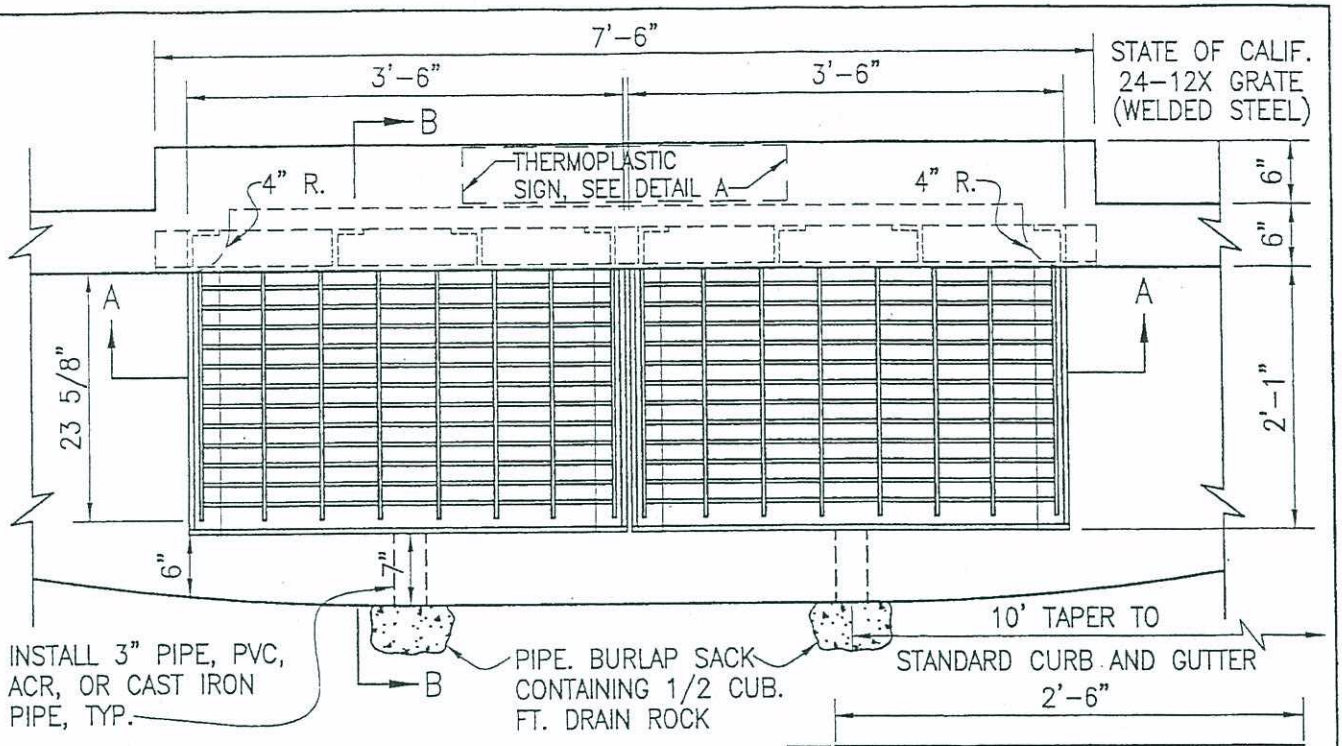

PLAN

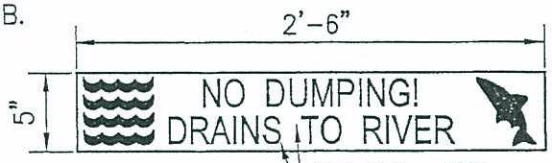

WHITE THERMOPLASTIC CUTOUT ON
BLUE THERMOPLASTIC BACKGROUND

DETAIL A

NOTE:

1. ALL IRON WORK SHALL BE 1/2" GALVANIZED STEEL.
2. GRATES AND FRAMES SHALL BE BICYCLE TYPE.

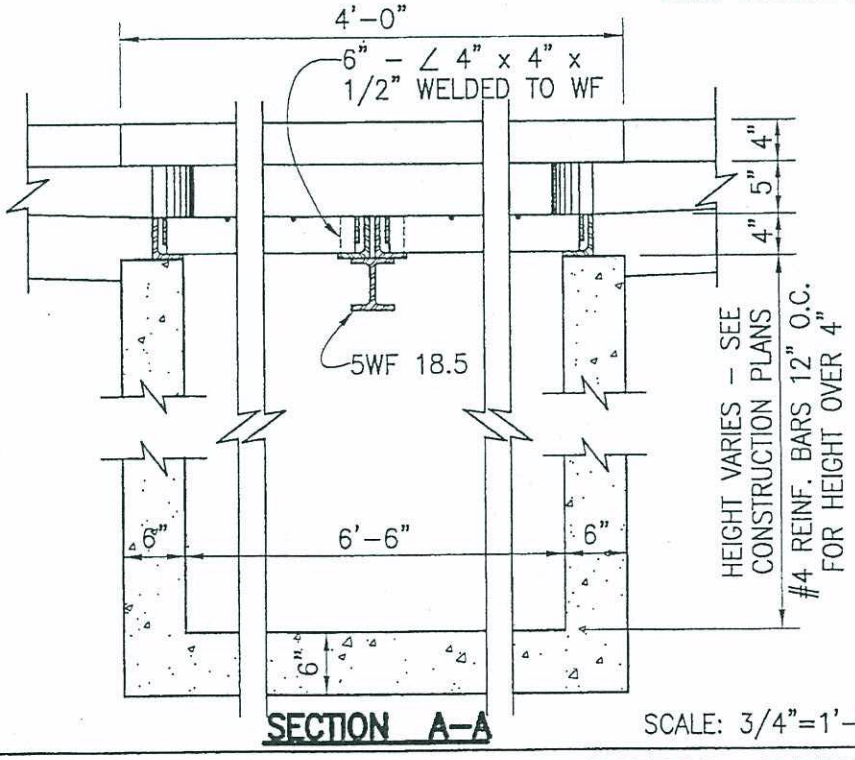

SECTION A-A

SCALE: 3/4"=1'-0"

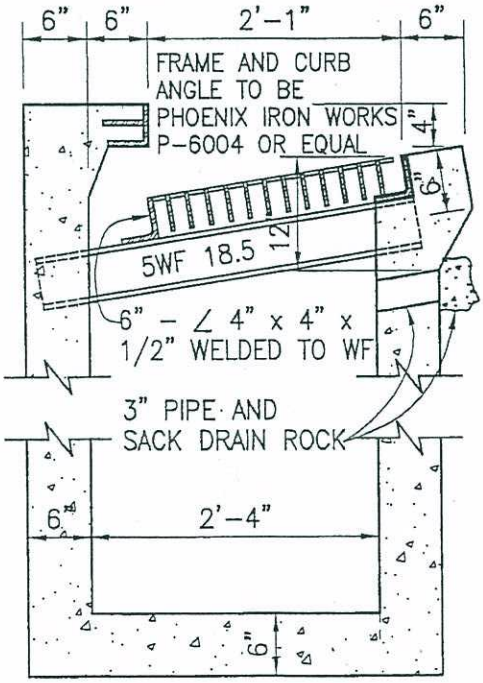

SECTION B-B

ENGINEERING SERVICES
CITY OF ANTIOCH

DRAWN BY: S. Rodriguez REVISIONS: 4/28/05	**STANDARD DOUBLE CATCH BASIN TYPE "C" (BICYCLE GRATE)** **CD - 29C**	APPROVED BY: J.G. BRANDT CITY ENGINEER DATE: 6/7/05

p:\pw standard drawings\cd-29c.dwg

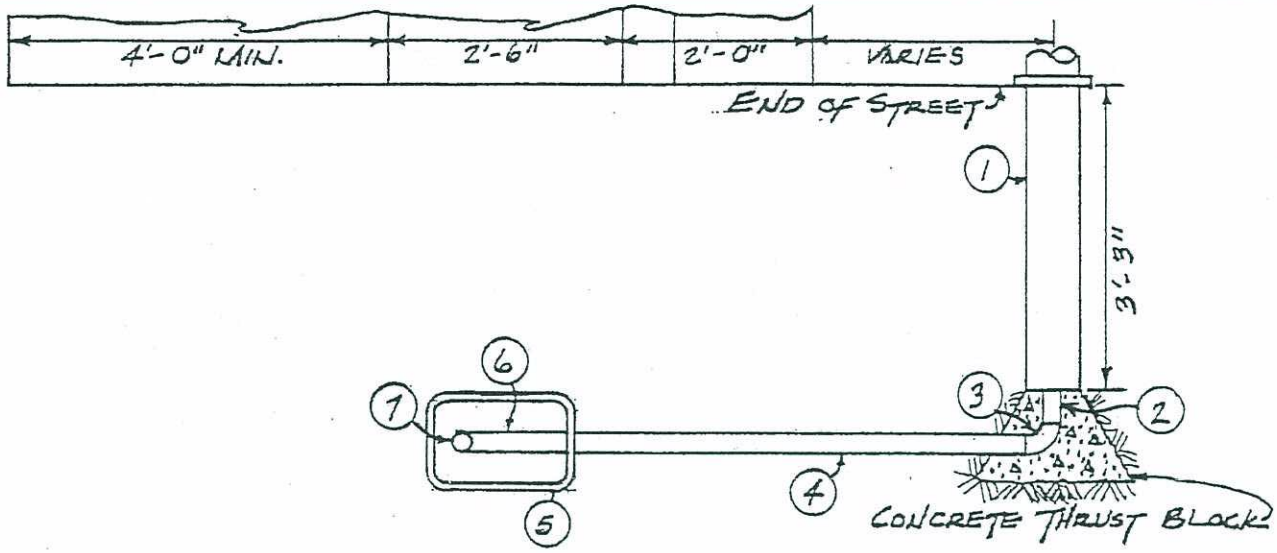

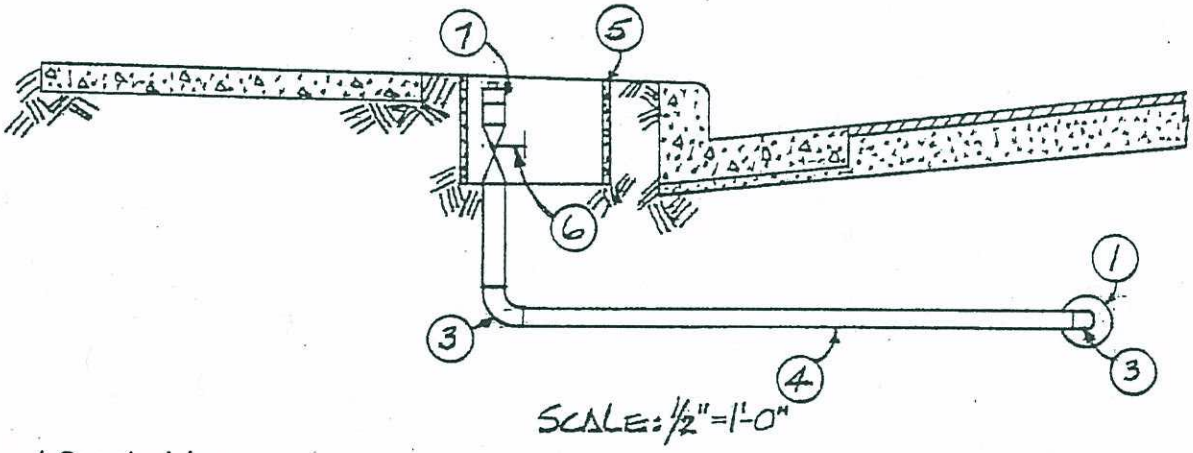

1. Supply Line
2. 2" Nipple-Bronze
3. 2" Elbow-Bronze
4. 2" Pipe
5. Precast concrete meter box, Christy No. B3 with Type D10 lid.
6. 2" Ball Valve, 150 psi, Bronze, ~~Non Rising Stem, & Corporation stop, Bronze.~~
7. 2" Coupling, plugged.

Pipe and fittings shall be Type K copper.

COMMUNITY DEVELOPMENT DEPARTMENT
ENGINEERING DIVISION CITY OF ANTIOCH, CALIFORNIA

Drawn by:
Tony Sokol
Date: 2-10-75
REV. 1 6-30-94
2 2-9-96

STANDARD WATER MAIN BLOW-OFF ASSEMBLY

CD-30

Approved by:
S.E. Davis R.E. 14298
City Engineer
Date:

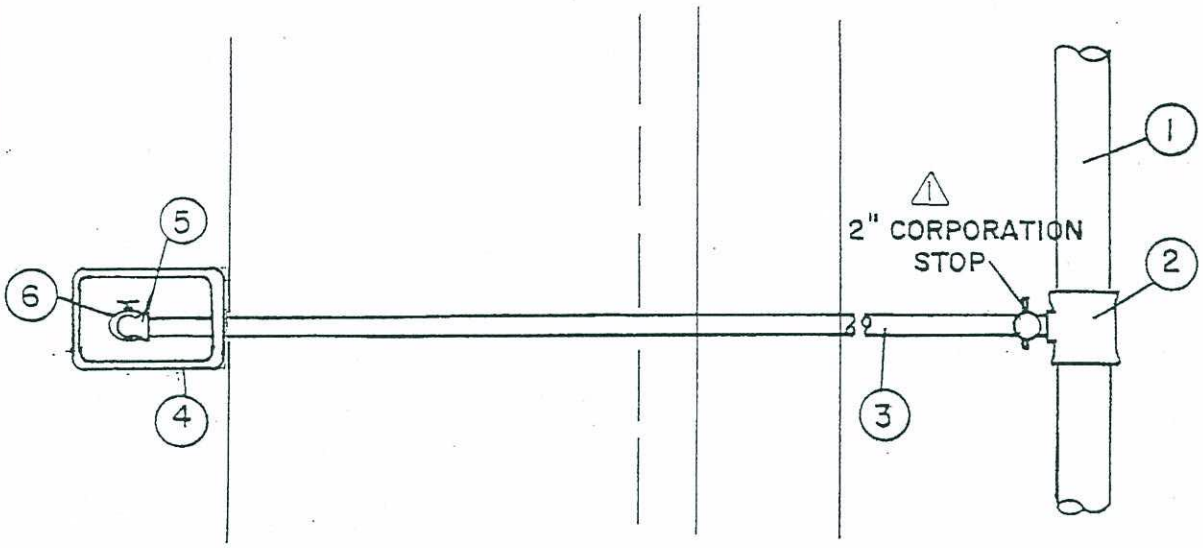

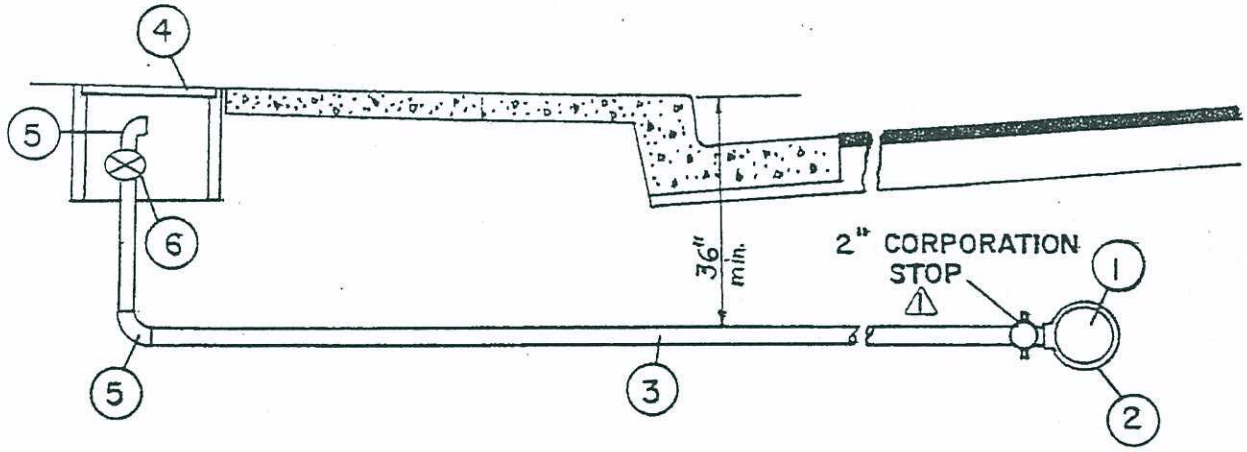

1. Water main
2. Tapped ~~cast iron tee, or~~ bronze, double strap, service clamp.
3. 2" Pipe
4. Precast concrete meter box, Christy No. B3 with Type D10 lid.
5. 2" Elbows
6. 2" Ball Valve, bronze, ~~non rising stem,~~ 150 psi.
   Pipe and fittings shall be Type K copper.

Community Development Department
Engineering Division City of Antioch, California

Drawn by W.E.S. REVISED 2-10-75 Date Jan. 25, 1968	STANDARD IN-LINE WATER MAIN BLOW-OFF ASSEMBLY	APPROVED BY S.E. DAVIS RE 14098 Exp. 3-31-97 CITY ENGINEER 6-4-75
	CD-30A	

REV. 1 6-30-94
2 2-9-96

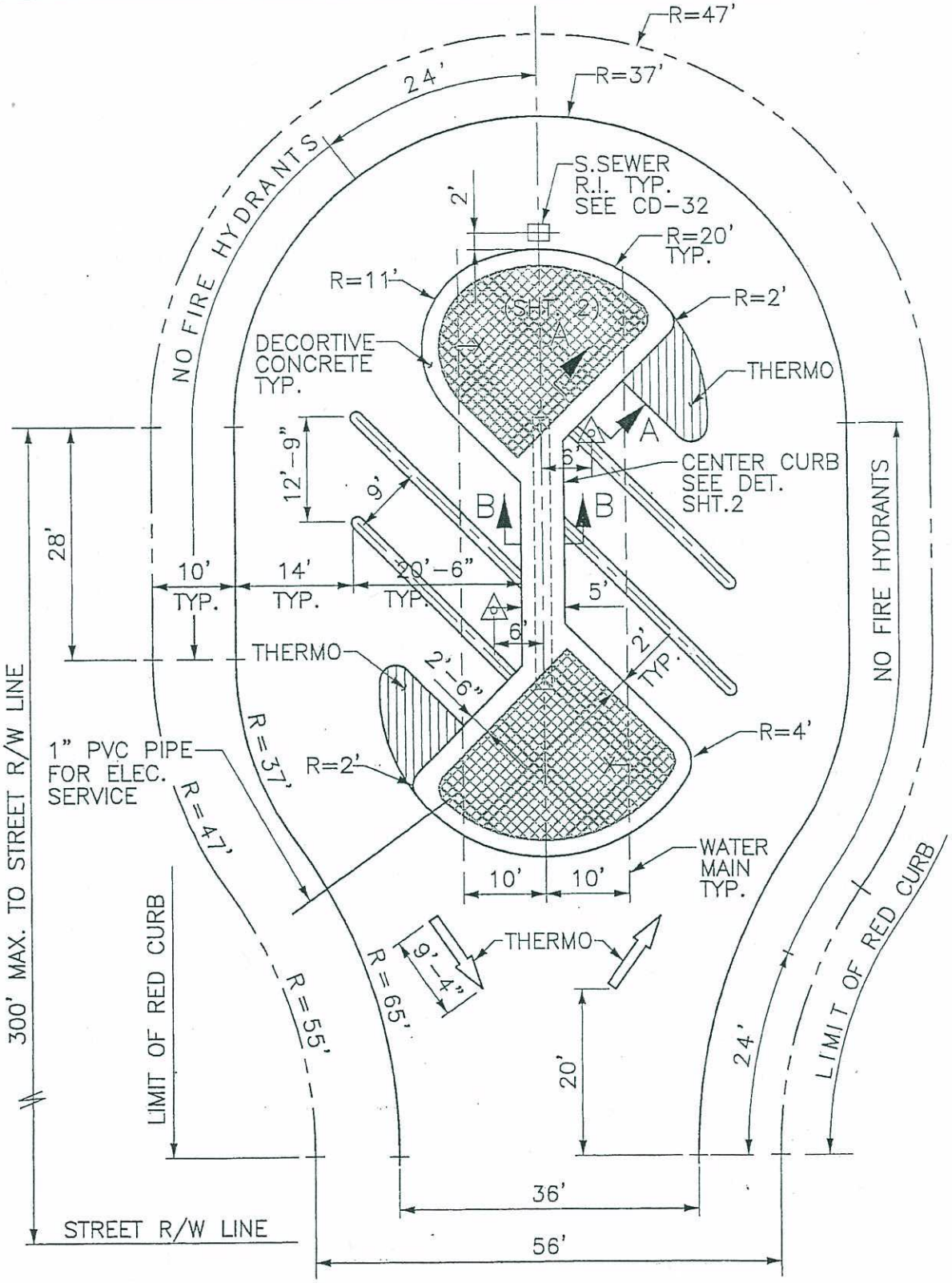

ENGINEERING SERVICES
CITY OF ANTIOCH

DRAWN BY: S. Rodriguez REVISIONS: 4/28/05	**STANDARD CUL DE SAC TURNING BULB** **CD-31A** SHT. 1 OF 2	APPROVED BY: J.G. BRANDT CITY ENGINEER DATE: 6/7/05

p:\pw standard drawings\cd-31a.dwg (sheet 1)

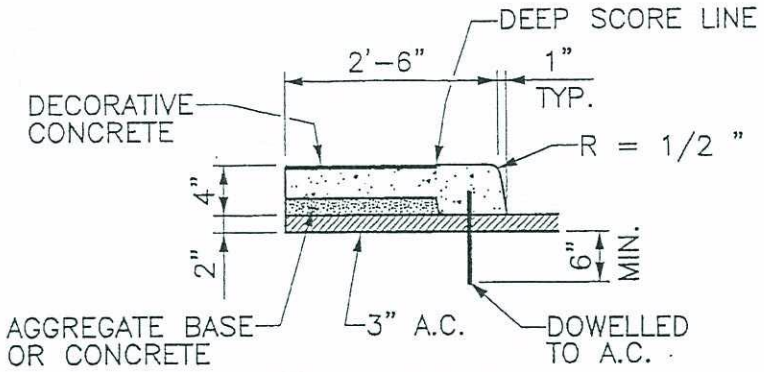

SECTION A-A

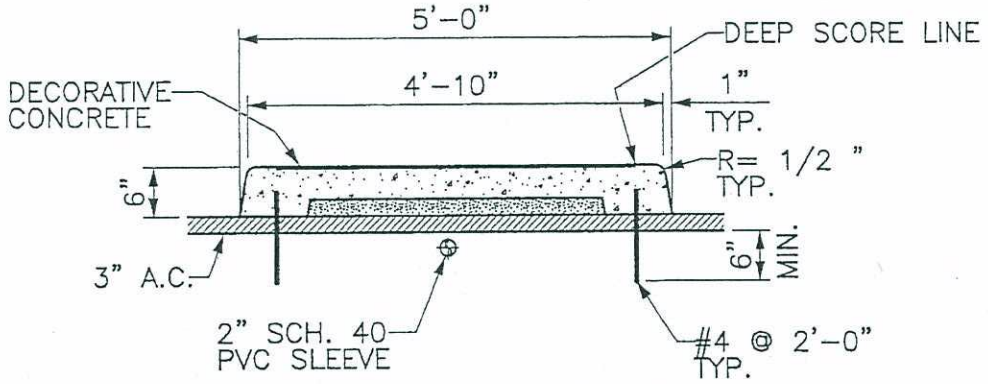

SECTION B-B

△ LOCATE STANDARD STREET MONUMENT (CD-27) ON OPPOSITE SIDE OF WATER MAIN.

1" TAP WITH BRONZE CORP. STOP

REMOVE A.C. AND A.B. IN ISLAND AND LANDSCAPE WITH IRRIGATION SYSTEM.

NOTES:

1. PAINT RED CURB, INSTALL WHITE ARROWS AND PARKING STALLS IN THERMOPLASTIC AS SHOWN PER STATE STANDARD SPECIFICATION.
2. INSTALL 4" DOUBLE STRIPE PARKING STALLS IN THERMOPLASTIC 18" ON CENTER, TYP.
3. ONE INCH TAP WITH BRONZE CORP. STOP SHALL BE PROVIDED FOR LANDSCAPING IRRIGATION.
4. PROVIDE ELECTRICAL SERVICE FOR IRRIGATION CONTROLLER.

ENGINEERING SERVICES
CITY OF ANTIOCH

DRAWN BY: MAC	STANDARD CUL DE SAC TURNING BULB	APPROVED BY:
REVISIONS: 4/28/05		J.G. BRANDT CITY ENGINEER
	CD-31A SHT. 2 OF 2	DATE: 6/7/05

p:\pw standard drawings\cd-31a.dwg (sheet 2)

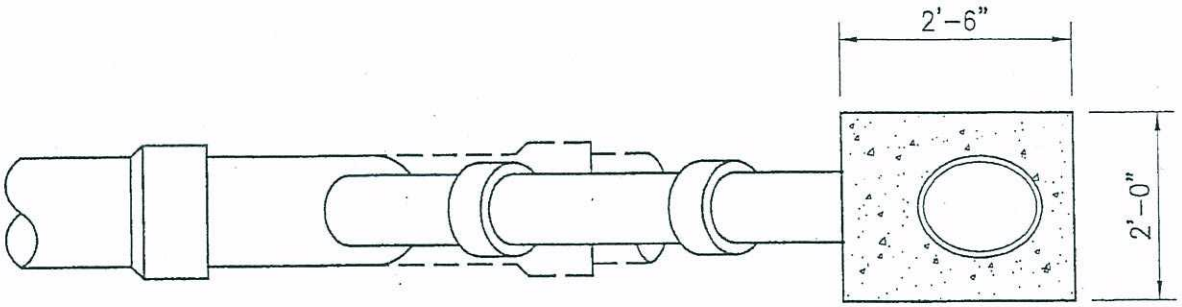

SET CASTING IN 8" SLAB
CLASS A CONCRETE

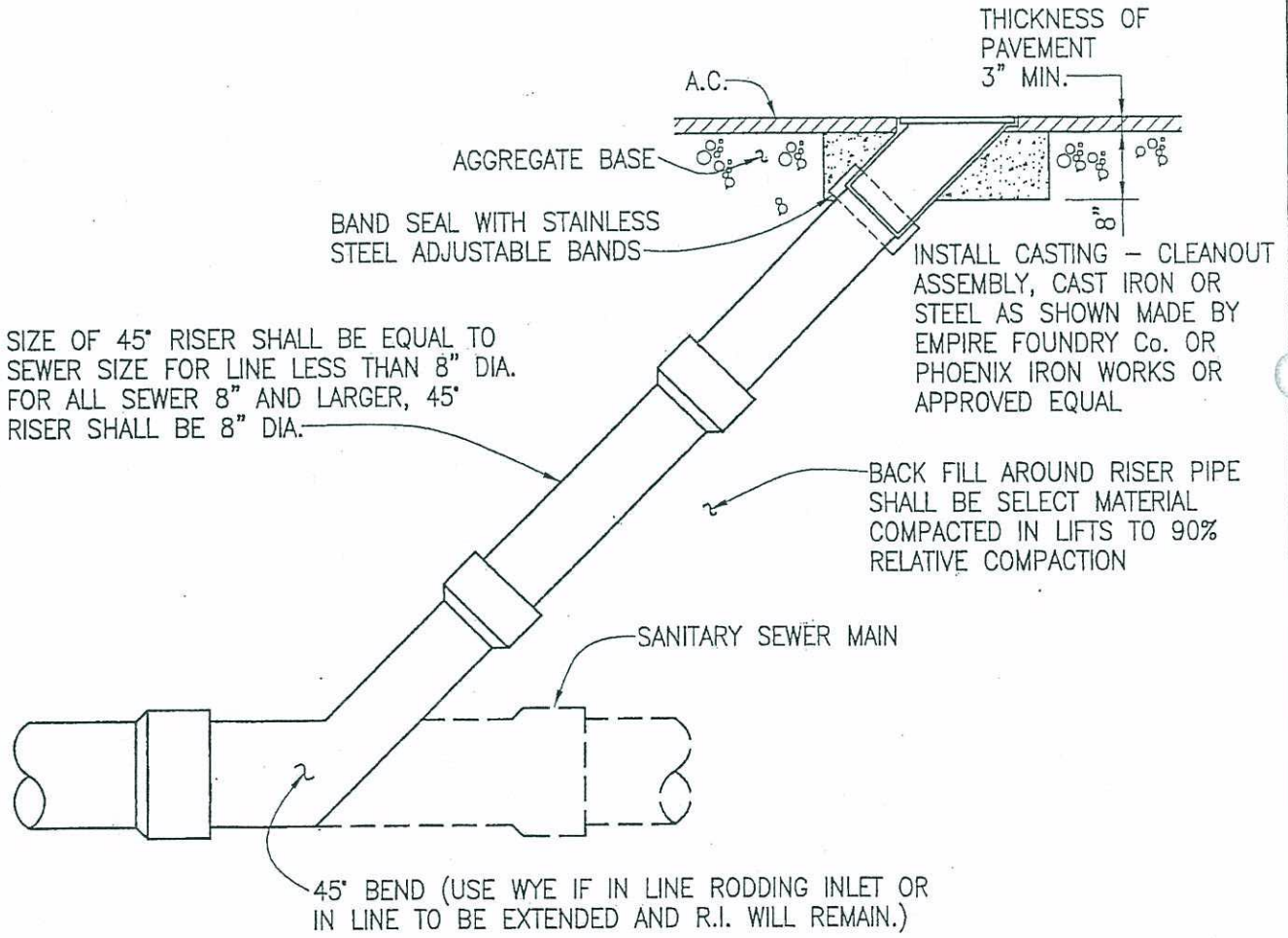

SCALE: 1/2"=1'-0"

ENGINEERING SERVICES
CITY OF ANTIOCH

DRAWN BY: S. Rodriguez	STANDARD RODDING INLET	APPROVED BY:
REVISIONS: 4/28/05	TYPE I	J.G. BRANDT CITY ENGINEER
	CD – 32	DATE: 6/7/05

c:\temp\cd-32.dwg

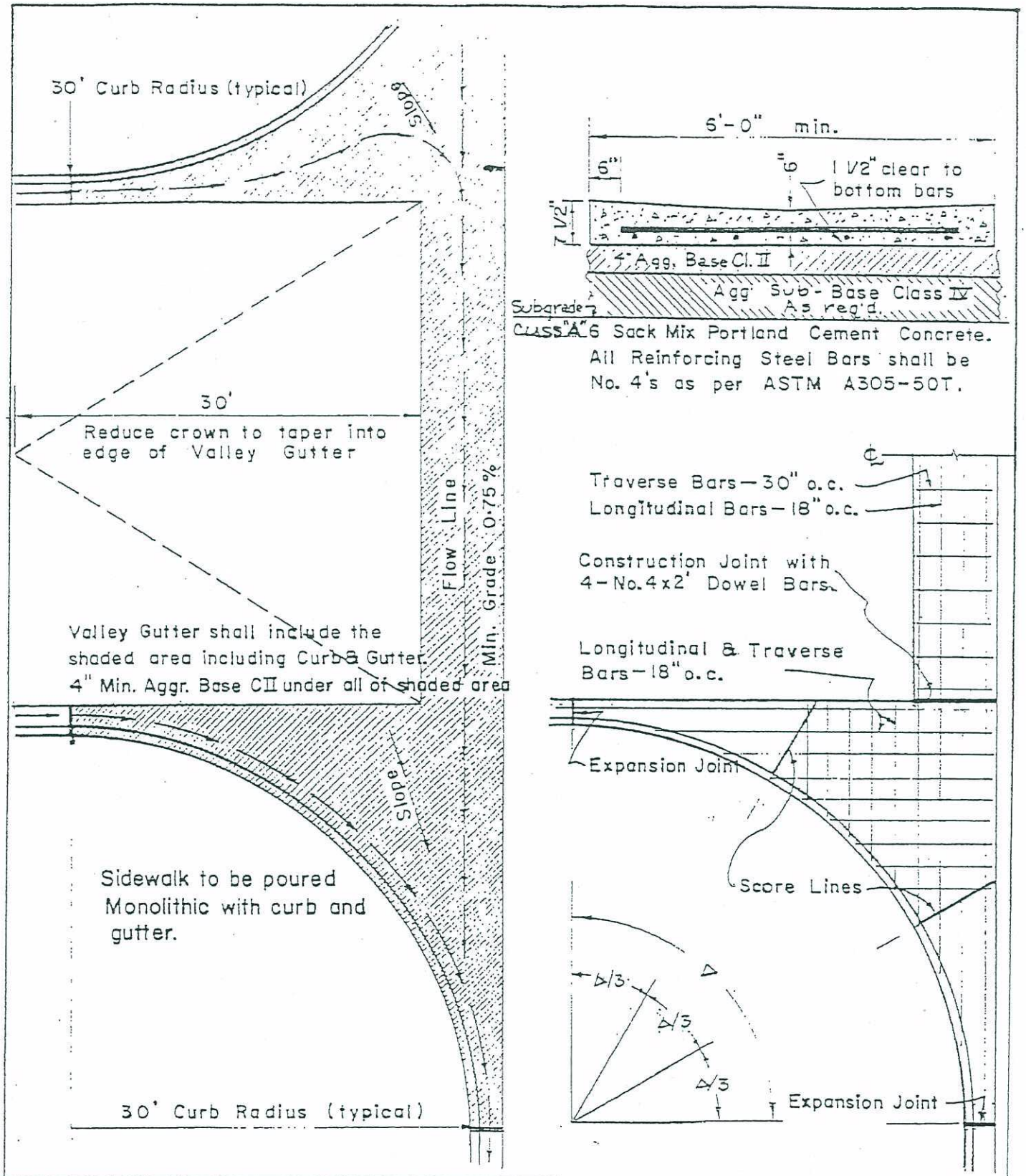

COMMUNITY DEVELOPMENT DEPARTMENT
DIVISION OF ENGINEERING CITY OF ANTIOCH, CALIFORNIA

Drawn by W.G. Date 4-12-72 Revised 12-18-72 S.C.R. REVISED 2-11-75 T.S. REVISED 1-26-77 M.B.I.	STANDARD VALLEY GUTTER TYPE I CD-33	APPROVED BY S.E. DAVIS R.E. 14298 CITY ENGINEER Date 6-1-75

NOTE:

RELATIVE COMPACTION OF NOT LESS THAN 95 PERCENT SHALL BE OBTAINED FOR A MINIMUM DEPTH OF 2.5 FEET BELOW FINISHED GRADE FOR THE WIDTH OF THE TRAVELED WAY PLUS 3 FEET ON EACH SIDE THEREOF, WHETHER IN EXCAVATION ON IN EMBANKMENT.

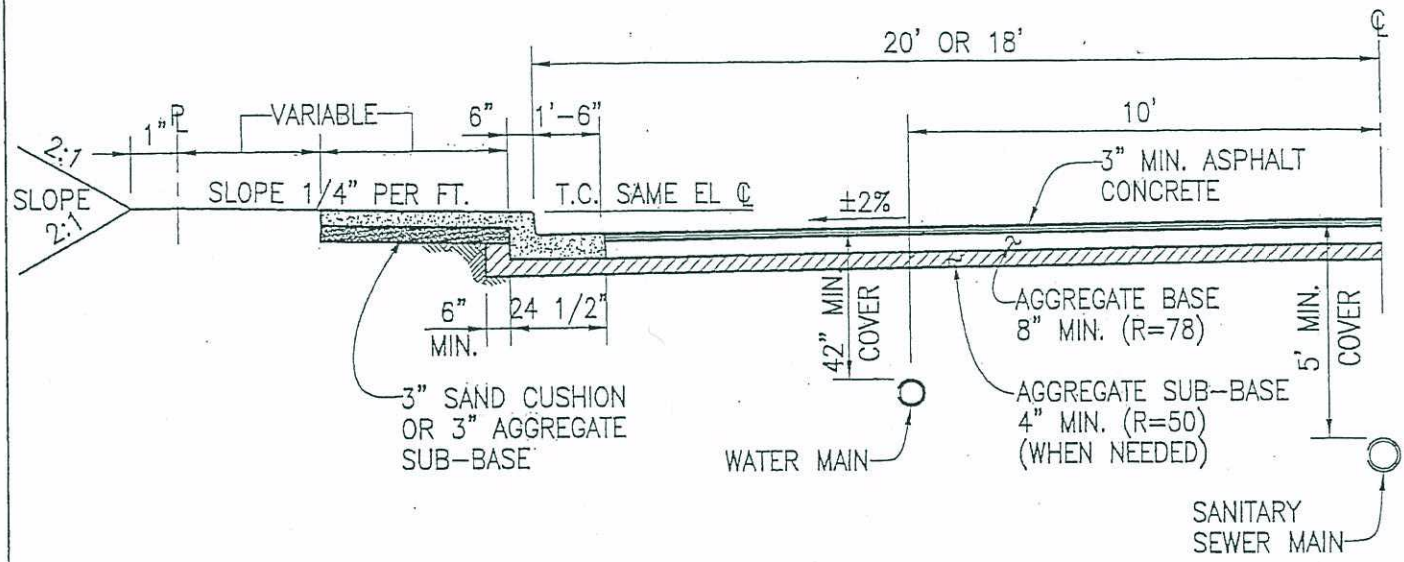

PAVEMENT SECTION TO BE DETERMINED BY SOILS TEST FOR RESISTANCE (R) VALVE AND TRAFFIC INDEX

SCALE: 1/4"=1'-0"

ENGINEERING SERVICES
CITY OF ANTIOCH

DRAWN BY: S. Rodriguez	TYPICAL STREET SECTION	APPROVED BY:
REVISIONS: 4/28/05	PAVEMENT CROWN	J.G. BRANDT CITY ENGINEER
	CD - 34	DATE: 6/7/05

c:\temp\cd-34.dwg

NOTES:

1. FINISH ASPHALT SURFACE CARRIED DOWN OVER RADIUS TO MEET TOP SURFACE OF GUTTER.
2. THICKNESS OF SUB-BASE MATERIAL UNDER CURB AND GUTTER TO BE DETERMINED BY THE STREET SUB-BASE ELEVATION. (MIN. THICKNESS = 4").
3. ALL MATERIAL UNDER CURB, GUTTER TO BE COMPACTED TO 95% RELATIVE DENSITY.
4. ALL CONCRETE TO BE CLASS B CONCRETE (5 SACK MIX)
5. SIDEWALK TO BE SCORED AT 5FT. INTERVALS, ALL SCORE LINES SHALL BE 1/2" DEEP.
6. THE CURB SHALL BE SCORED AT 10FT. INTERVALS, ALL SCORE LINES SHALL BE 1" DEEP.
7. CURB, GUTTER AND SIDEWALK TO BE BROOM FINISHED.
8. ALL MATERIAL UNDER SIDEWALK TO BE COMPACTED TO 90% RELATIVE DENSITY.

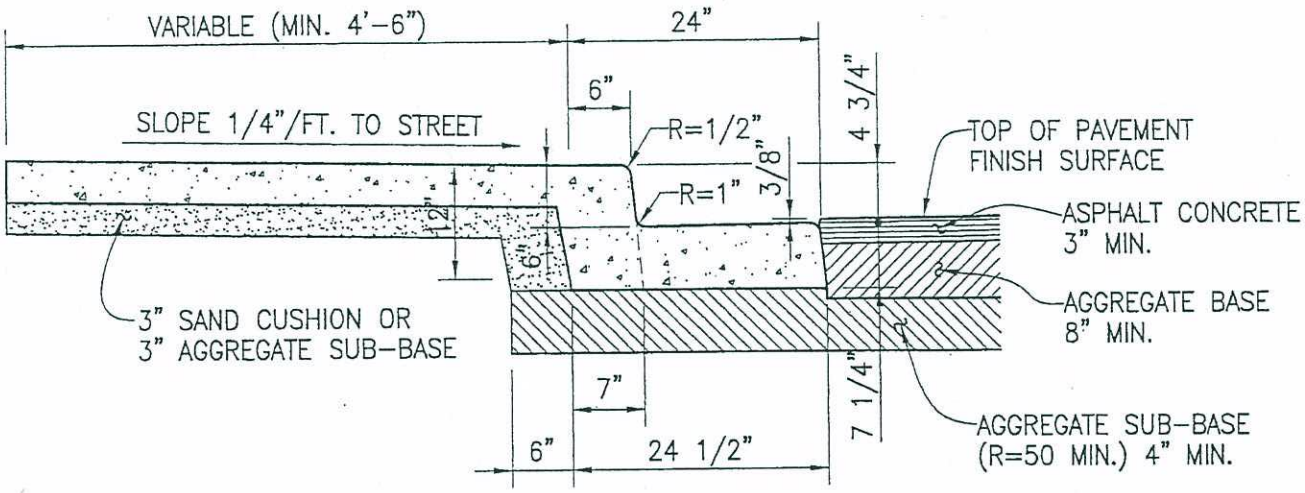

ENGINEERING SERVICES
CITY OF ANTIOCH

DRAWN BY: S. Rodriguez	STANDARD MONOLITHIC SIDEWALK, CURB AND GUTTER	APPROVED BY:
REVISIONS: 4/28/05		J.G. BRANDT CITY ENGINEER
	CD - 35	DATE: 6/7/05

p:\pw standard drawings\cd-35.dwg

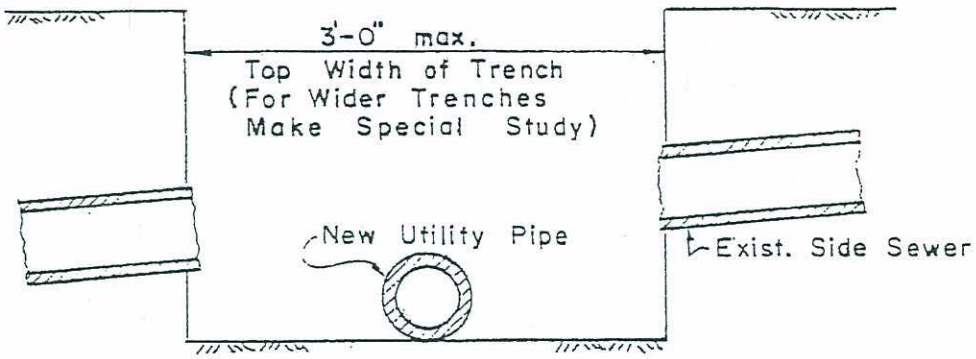

BREAK

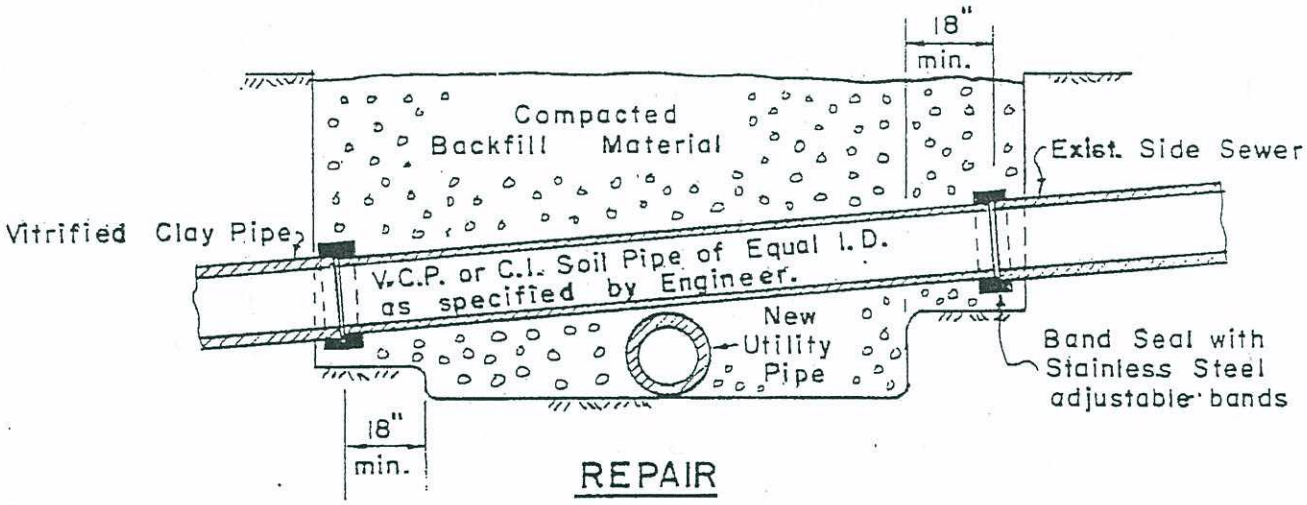

REPAIR

PROCEDURE

Trim side sewer pipe back to a clean cut undamaged and, being a minimum of 18" into trench wall. Cut piece of new sewer pipe of equal inside diameter to fit space between trimmed ends with a maximum clearance of 1/4 inch at each end. Install the coupling on the upstream end of the side sewer, then place another coupling on the downstream end. Place an adaptor ring of the proper size on each end of the C.I. pipe replacement section, then insert one end in the coupling on the downstream end. Align pipes at upstream end and slide coupling downstream, centering it over the joint. Tighten coupling bands.

NOTE: Alterations of sewer grades will be permitted only after written permission has been received from the City Engineer.

COMMUNITY DEVELOPMENT DEPARTMENT
DIVISION OF ENGINEERING CITY OF ANTIOCH, CALIFORNIA

Drawn by W.G. Date 4-11-72	STANDARD SANITARY SEWER LATERAL REPAIR CD-36	APPROVED BY S.E. Davis S.E. DAVIS R.E. 14290 CITY ENGINEER Date 5-1-72

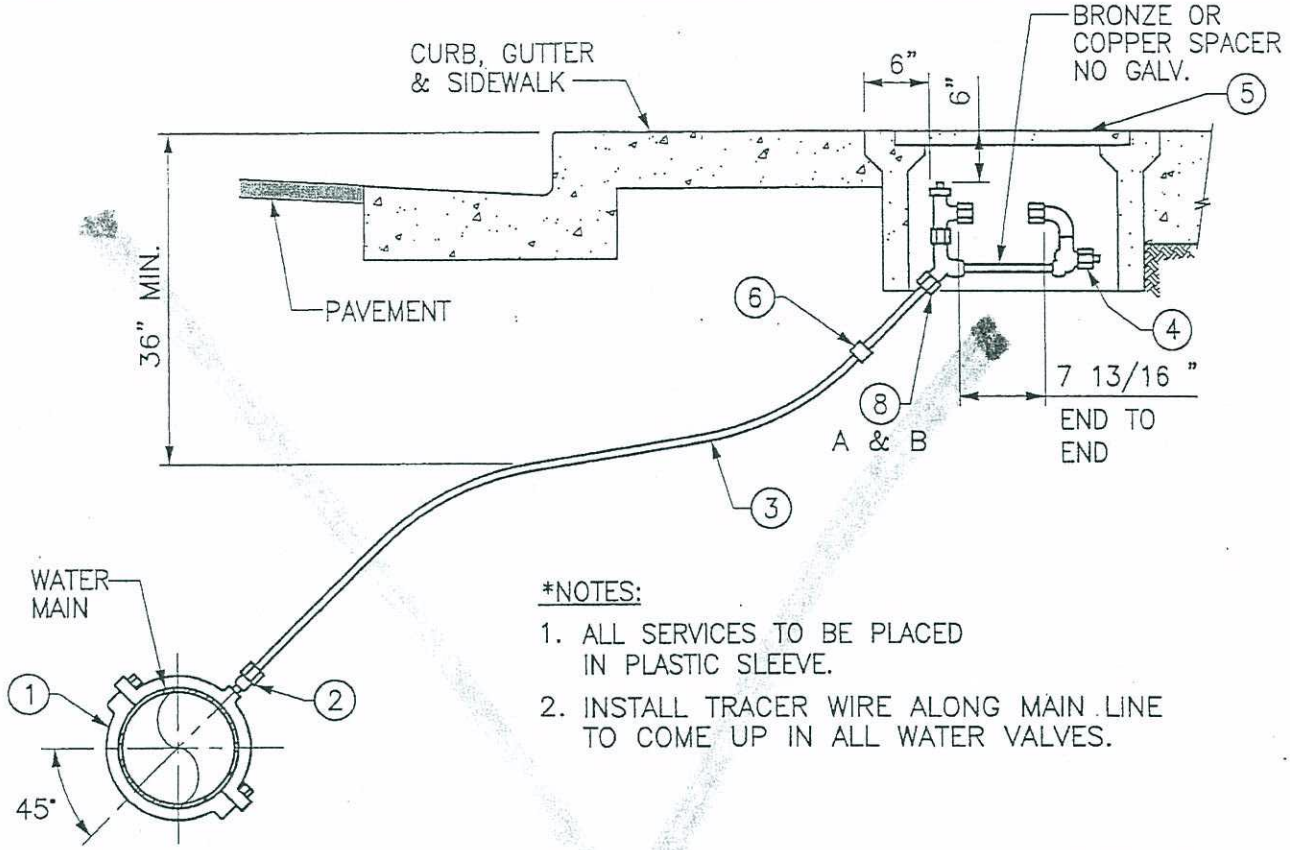

*NOTES:

1. ALL SERVICES TO BE PLACED IN PLASTIC SLEEVE.
2. INSTALL TRACER WIRE ALONG MAIN LINE TO COME UP IN ALL WATER VALVES.

ITEM	SPECIFICATIONS	APPROVED FOR USE
(1) SERVICE CLAMP FOR C-900	BRONZE, SINGLE STRAP, C.C. THREAD. BRONZE, MUELLER H-1300 OR EQUAL.	MUELLER # H-13441 SMITH BLAIR #321 DAN DEE # 102S
(2) CORPORATION STOP WET DRY	BRONZE; C.C. THREAD TO COPPER. BRONZE; C.C. THREAD TO IRON.	MUELLER # 14158-99001, FORD # F-60
(3) 1" LATERAL	TYPE "K" COPPER	
(4) METER YOKE	5/8 " x 3/4 " COPPER TO COPPER, LOCK STOP INLET; INSULATED OUTLET.	MUELLER # H-13441 OR FORD # VEA-2
(5) METER BOX	CHRISTY B9X W/ SOLID LID	
(6) SERVICE COUPLER	WHERE REQUIRED FOR REPAIR.	FORD # C-1502
(8A) REDUCER COUPLING	3/4 " x 1" C.C. THREAD TO COPPER	MUELLER # 15062 WITHOUT H15430 TUBE NUT
(8B) COUPLING	1" COPPER THREAD TO COMPRESSION CONNECTION	MUELLER # 15403

ENGINEERING SERVICES
CITY OF ANTIOCH

DRAWN BY: S. Rodriguez

REVISIONS:

WATER SERVICE LATERAL
COMPRESSION CONNECTIONS

CD-40

APPROVED BY:

J.G. BRANDT
CITY ENGINEER
DATE: 6/7/05

p:\pw standard drawings\cd-40.dwg

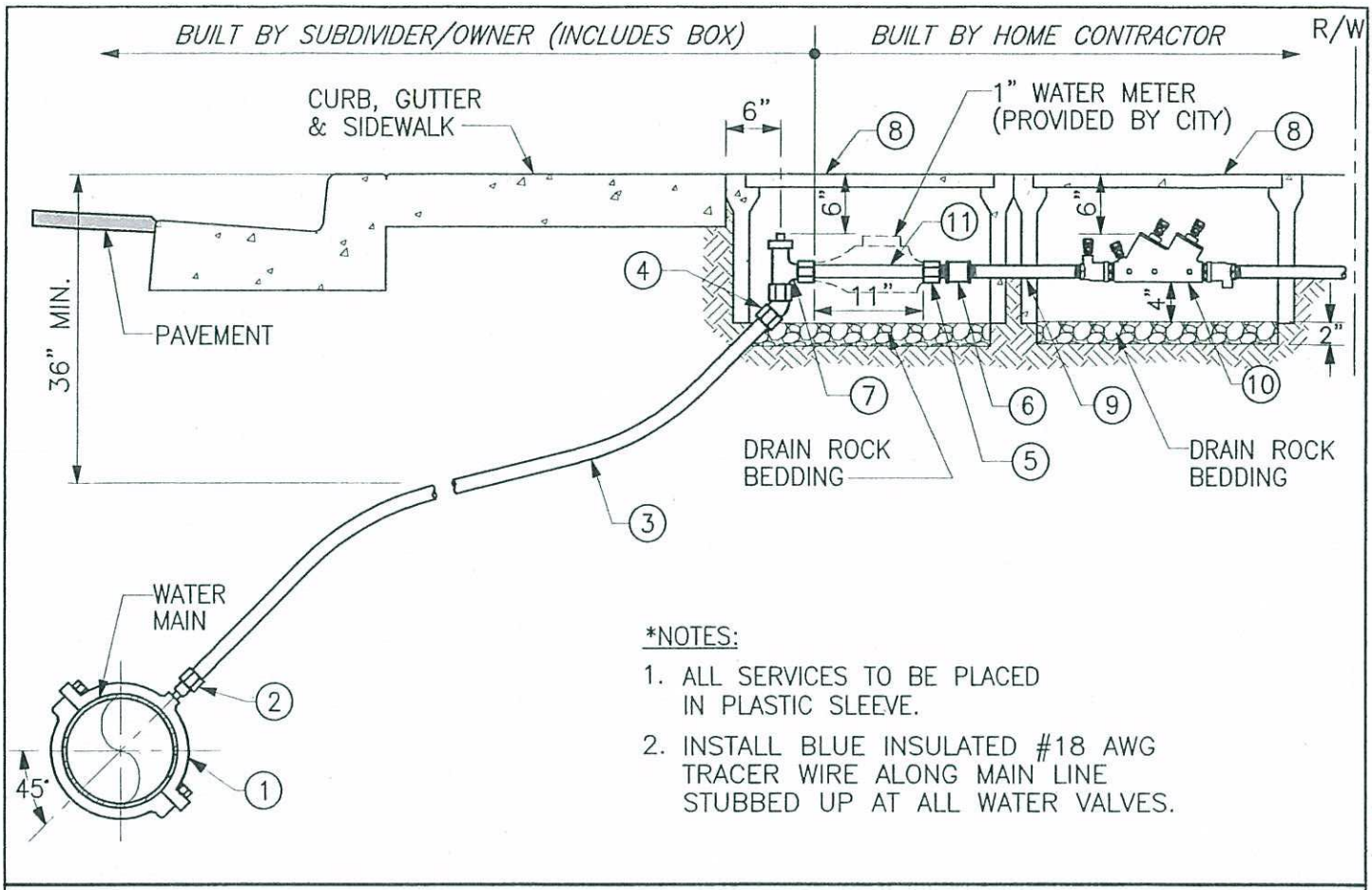

*NOTES:

1. ALL SERVICES TO BE PLACED IN PLASTIC SLEEVE.
2. INSTALL BLUE INSULATED #18 AWG TRACER WIRE ALONG MAIN LINE STUBBED UP AT ALL WATER VALVES.

ITEM	SPECIFICATIONS	APPROVED FOR USE (OR APPROVED EQUAL)
(1) SERVICE CLAMP FOR C-900	BRONZE, SINGLE STRAP, C.C. THREAD. BRONZE, MUELLER H-1300 OR EQUAL.	MUELLER # H-13441
(2) CORPORATION STOP	C.C. THREAD TO 1" INCREASING	MUELLER # H-10003
(3) 1" LATERAL	TYPE "K" COPPER	
(4) COUPLING	1" 1/8 BEND CTS-MIP	MUELLER # H-15529
(5) METER SWIVEL NUT	1" x IP THREAD	MUELLER # H-10890
(6) COUPLING	1" BRASS	
(7) ANGLE METER VALVE	1" FIP x SWIVEL NUT	MUELLER # H-14265
(8) METER BOX	CHRISTY B16 W/ SOLID LID	
(9) NIPPLE	1" x 8" (MIN.) BRASS	
(10) 1" DC VALVE	1" TOP LOAD DOUBLE CHECK VALVE ASSEMBLY ONLY CENTERED IN BOX	CITY OF ANTIOCH APPROVED
(11) 11" JUMPER	1 1/4" SCH. 40 PVC PIPE WITH M ADPT. AT EACH END	

ENGINEERING SERVICES CITY OF ANTIOCH

DRAWN BY: S. Rodriguez

REVISIONS:

WATER SERVICE LATERAL CONNECTION FOR RESIDENTIAL FIRE SPRINKLER SYSTEMS

CD-40A

APPROVED BY: Ron Bernal

RON BERNAL, P.E.
CITY ENGINEER

DATE: 8/30/12

p:\pw standard drawings\cd-40.dwg

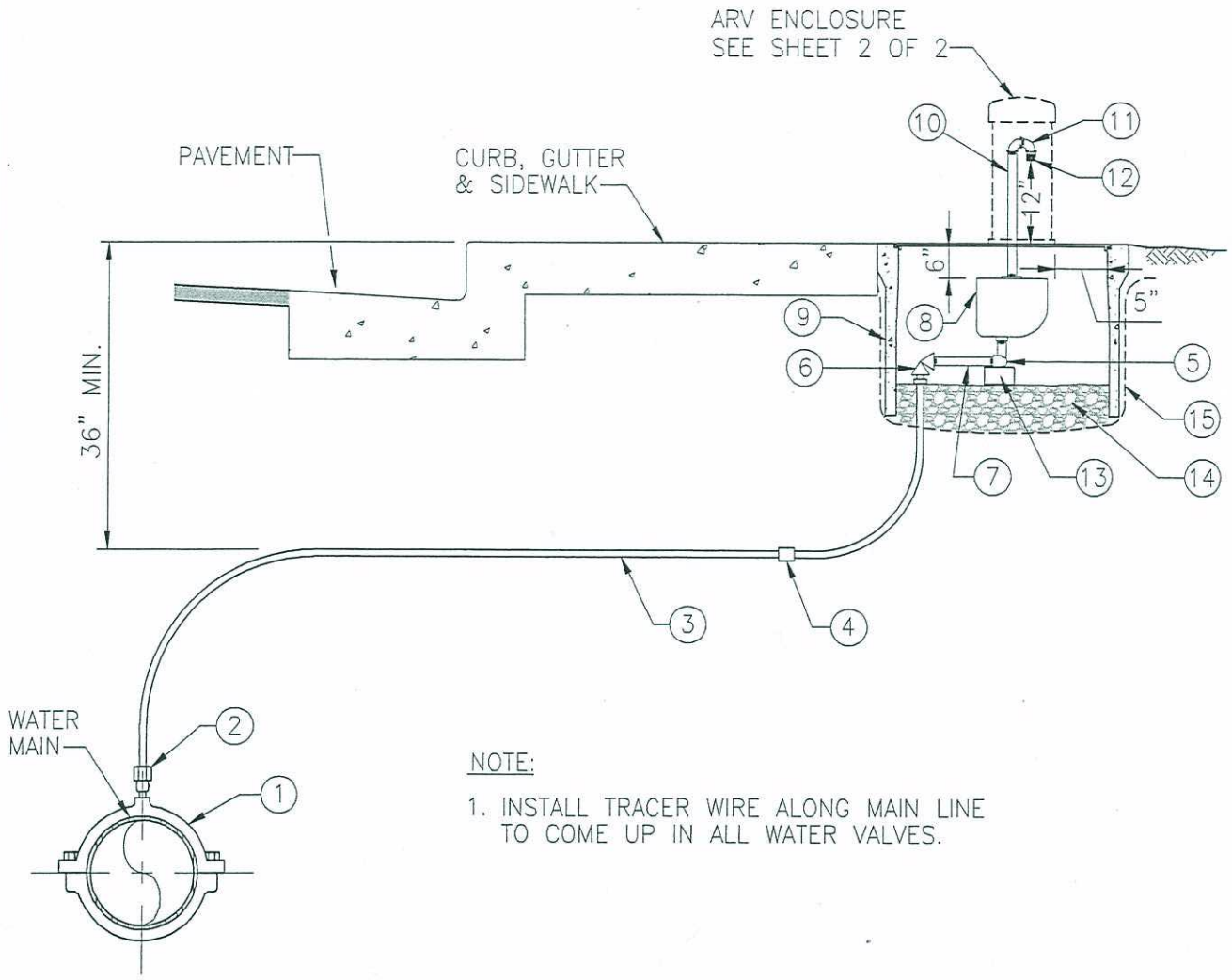

NOTE:

1. INSTALL TRACER WIRE ALONG MAIN LINE TO COME UP IN ALL WATER VALVES.

1. TAPPED BRONZE, DOUBLE STRAP SERVICE CLAMP.
2. CORPORATION STOP, BRONZE.
3. TYPE "K" COPPER, 1" MIN.
4. SERVICE COUPLER WHERE REQUIRED FOR REPAIR, OR BRONZE ELL WHEN NEEDED TO MAINTAIN REQUIRED DEPTH.
5. 2 – 1" BRONZE ST ELLS
6. 1" MUELLER B24258
7. 1" BRONZE NIPPLE
8. 1" AIR RELEASE VALVE
9. CONCRETE METER BOX (CHRISTY B36 X 12 WITH EXTENSION), BOX COVER SHALL BE PLACER WATERWORKS CAT #PW/AE3618m OR APPROVED EQUAL, SEE CD-41 SHEET 2 OF 2
10. 2" GALVANIZED NIPPLE (TYP.)
11. 2" GALVANIZED ELL & STEEL ELL.
12. NORTHTOWN HYTECH STAINLESS STEEL SCREEN AND HOSE CLAMPS OVER 2" GALVANIZED NIPPLE.
13. STANDARD BRICK
14. 3/4" CRUSHED ROCK
15. FILTER FABRIC (SHALL CONFORM TO STATE STANDARD SPEC. SECTION 88-1.03)

DEPARTMENT OF PUBLIC WORKS
ENGINEERING SERVICES CITY OF ANTIOCH

DRAWN BY: S. Rodriguez	AIR & VACUUM RELIEF VALVE DETAIL	APPROVED BY:
REVISIONS: *REVISED AIR RELEASE VALVE ASSEMBLY 9/21/10*	CD-41 (1 of 2)	J.G. BRANDT CITY ENGINEER DATE: 1/26/11

p:\pw standard drawings\cd-41.dwg

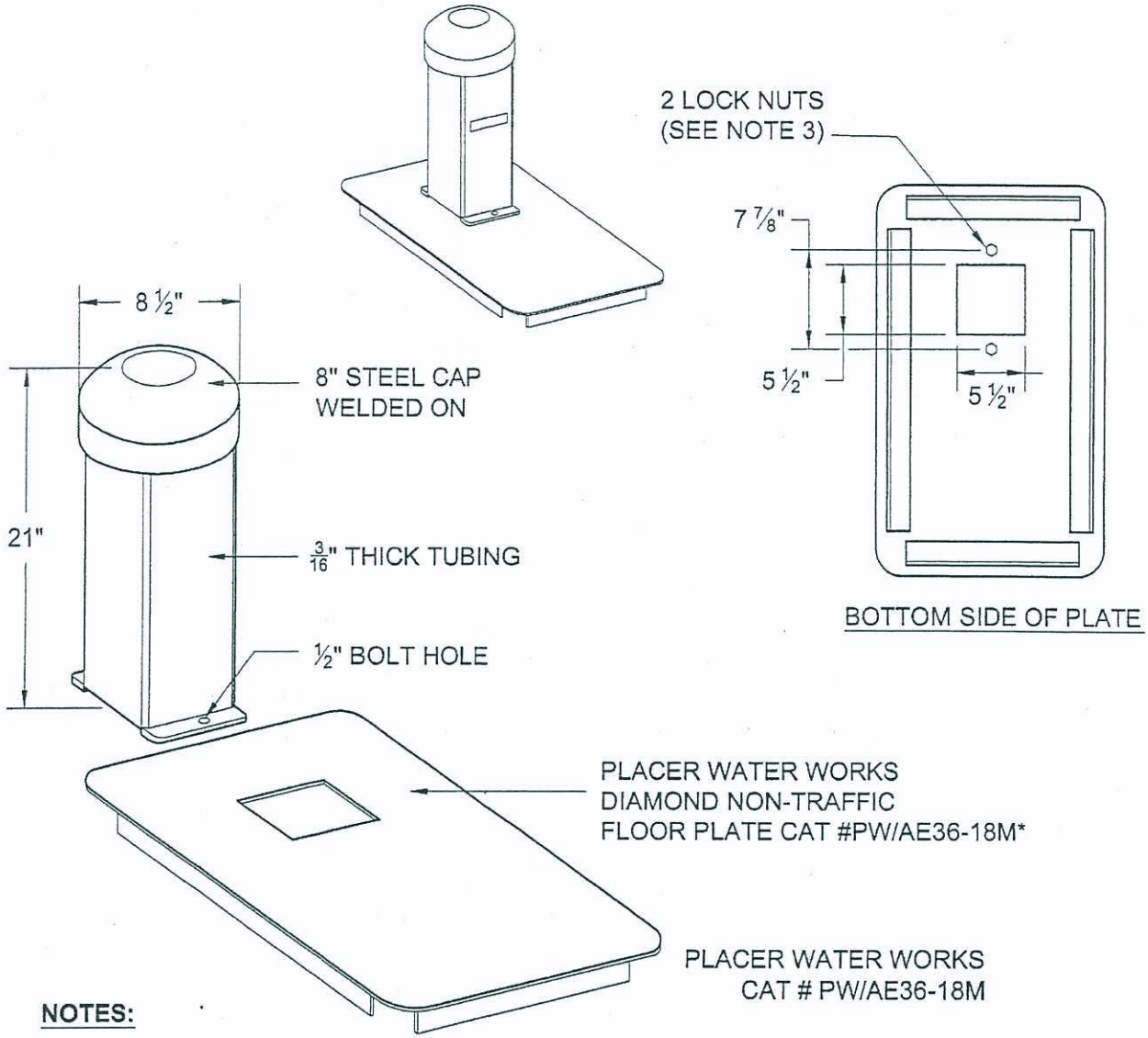

NOTES:

1. ALL METALS SHALL BE CLEANED WITH DEV PREP 88 BY DEVOE #788T0000*.
2. APPLY 2 TO 3 MILLS THICK OF DEVRAN 224HS CATALYZED POLYAMIDE EPOXY PRIMER* (COLOR: HUNTER GREEN) AND DEVTANE 379 CATALYZED ALIPHATIC URETHANE FINISH* TOP COAT TO THE STEEL CAP AND TUBING WALL.
3. LOCK NUTS SHALL BE WELDED TO THE UNDERSIDE OF THE FLOOR PLATE.

* OR APPROVED EQUAL

(Not To Scale)

DEPARTMENT OF PUBLIC WORKS
ENGINEERING SERVICES CITY OF ANTIOCH

DRAWN BY: S. Rodriguez	AIR & VACUUM RELIEF VALVE ENCLOSURE	APPROVED BY:
REVISIONS: *REVISED AIR RELEASE VALVE ASSEMBLY 9/21/10*	CD-41 (2 of 2)	J.G. BRANDT CITY ENGINEER DATE: 1/26/11

p:\pw standard drawings\cd-41_revised_2.dwg

Anchor blocks shall be 5 sack/cu. yd., Class "B" concrete, poured against undisturbed soil.

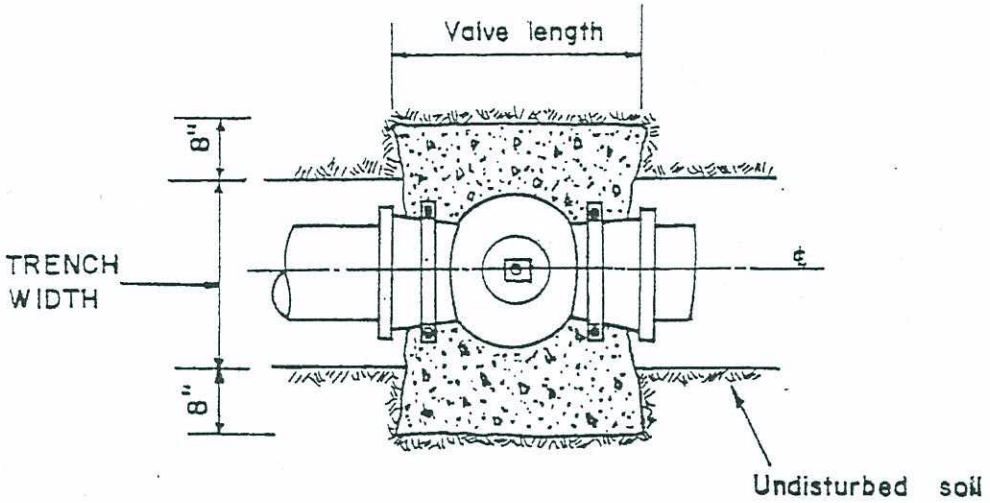

PLAN

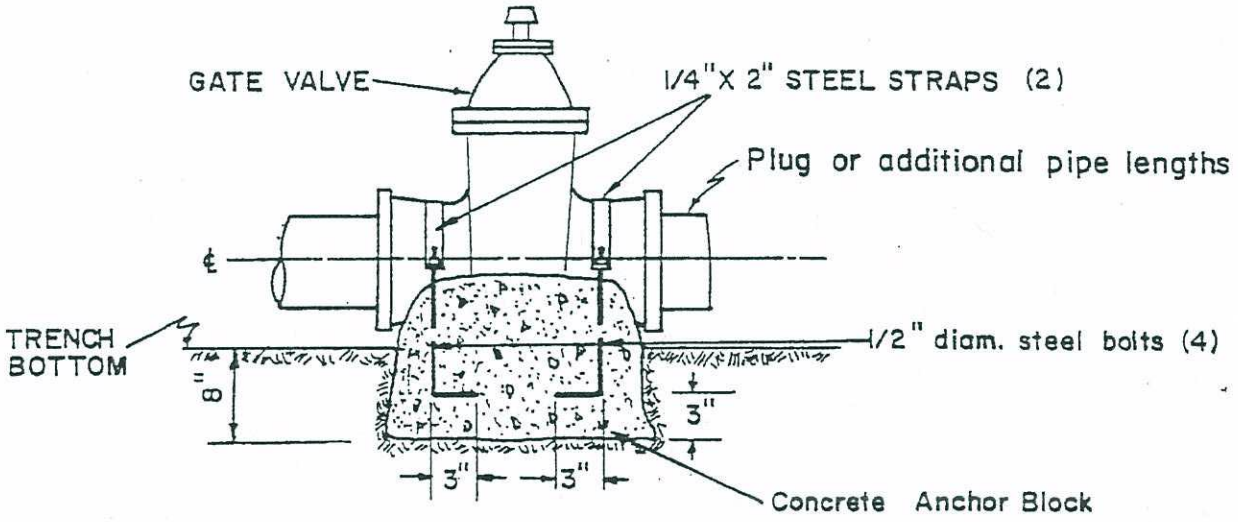

ELEVATION

COMMUNITY DEVELOPMENT DEPARTMENT
ENGINEERING DIVISION CITY OF ANTIOCH, CALIFORNIA

Drawn by W.E.S.	ANCHOR BLOCK DETAIL FOR END OF LINE VALVES	APPROVED BY: B.H. Maynard R.E. 1359 CITY ENGINEER
Date: Jan. 23, 1968 Revised Feb. 19, 1975	CD - 42	Date: 2-6-68 6-1-75

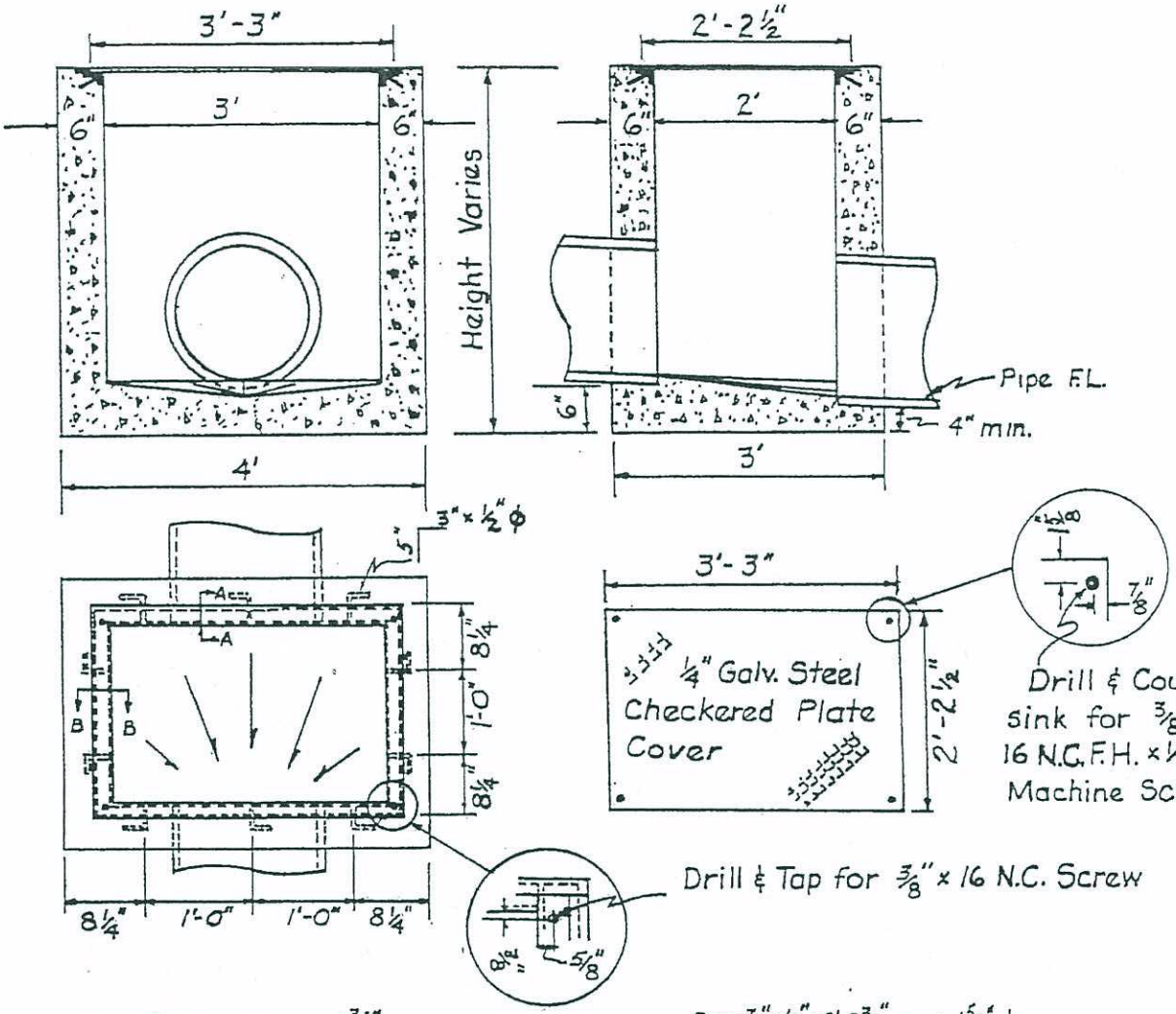

SECTION A-A

SECTION B-B

For box heights greater than 4', use No. 4 reinf. steel at 18" max., on centers.
Cover and frame are Contra Costa County Standard No. CC 3010, Dated 1 Sept. 1964
All concrete to be Class A, (6 sack).

COMMUNITY DEVELOPMENT DEPARTMENT
ENGINEERING DIVISION CITY OF ANTIOCH, CALIFORNIA

Drawn by W.E.S.	STANDARD JUNCTION BOX DETAIL	APPROVED BY B.H. Maynard R.E. 1359 CITY ENGINEER Date: 5/68
Date: 19 May 1968 REVISED: FEB. 19, 1975	CD - 43	6-1-75

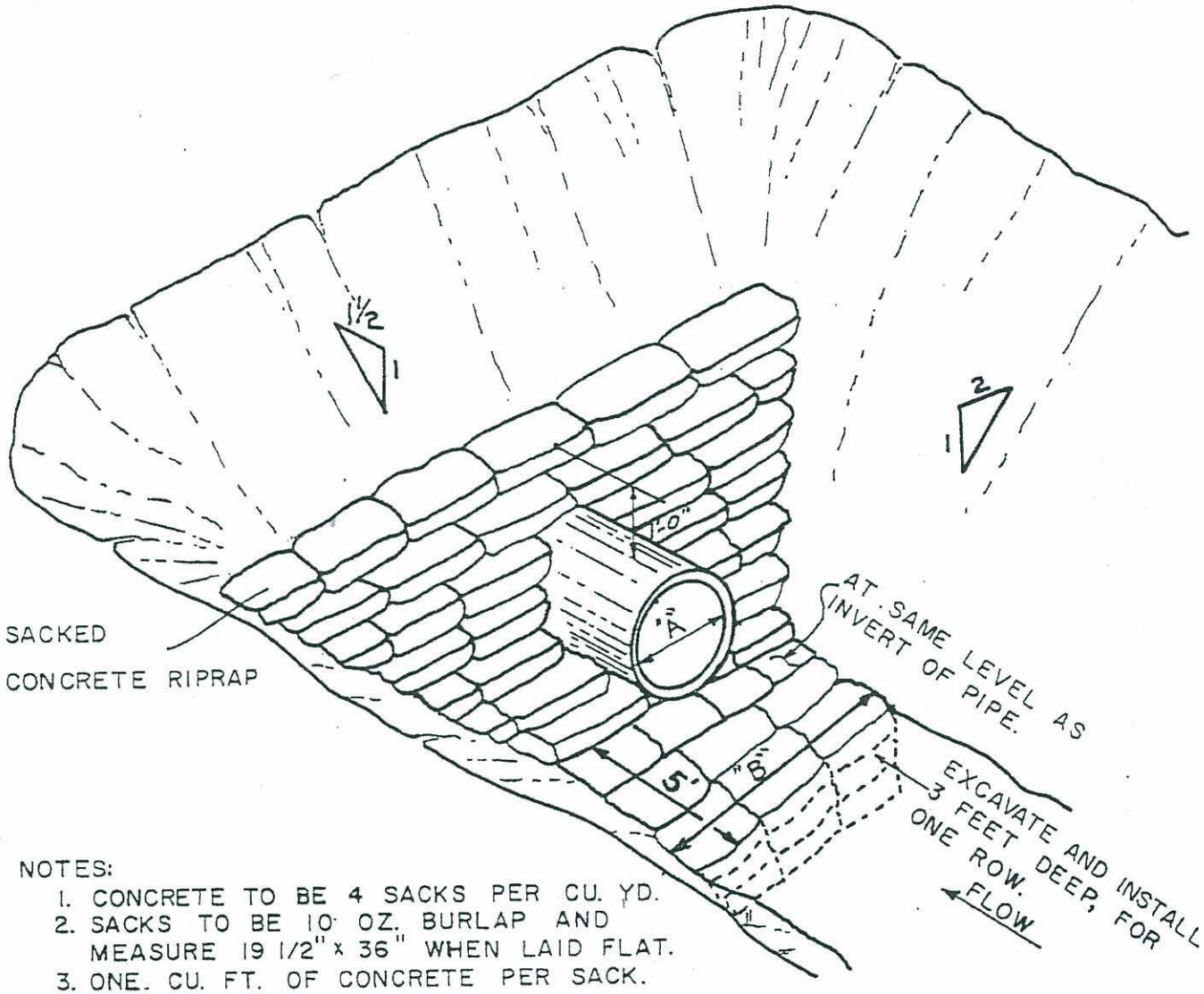

NOTES:

1. CONCRETE TO BE 4 SACKS PER CU. YD.
2. SACKS TO BE 10 OZ. BURLAP AND MEASURE 19 1/2" x 36" WHEN LAID FLAT.
3. ONE. CU. FT. OF CONCRETE PER SACK.
4. DIMENSION "B" TO BE TWO FEET LARGER THAN DIMENSION "A" (PIPE I.D.).
5. TOP OF RIPRAP TO BE 1'-0" MIN. HIGHER THAN HIGHEST HEADWATER ELEVATION.
6. FIELD CHANGES MAY BE REQUIRED BY THE CITY ENGINEER AS NECESSARY TO FIT THE EXISTING CONDITIONS.

COMMUNITY DEVELOPMENT DEPARTMENT

ENGINEERING DIVISION CITY OF ANTIOCH, CALIFORNIA

DRAWN BY G.C. REDMOND OCT. 29, 1969 Revised 4-6-72	SACKED CONCRETE HEADWALL DETAIL CD - 44	APPROVED BY Stanford E. Davis STANFORD E. DAVIS R.E.-14298 CITY ENGR. DATE: 10-30-69

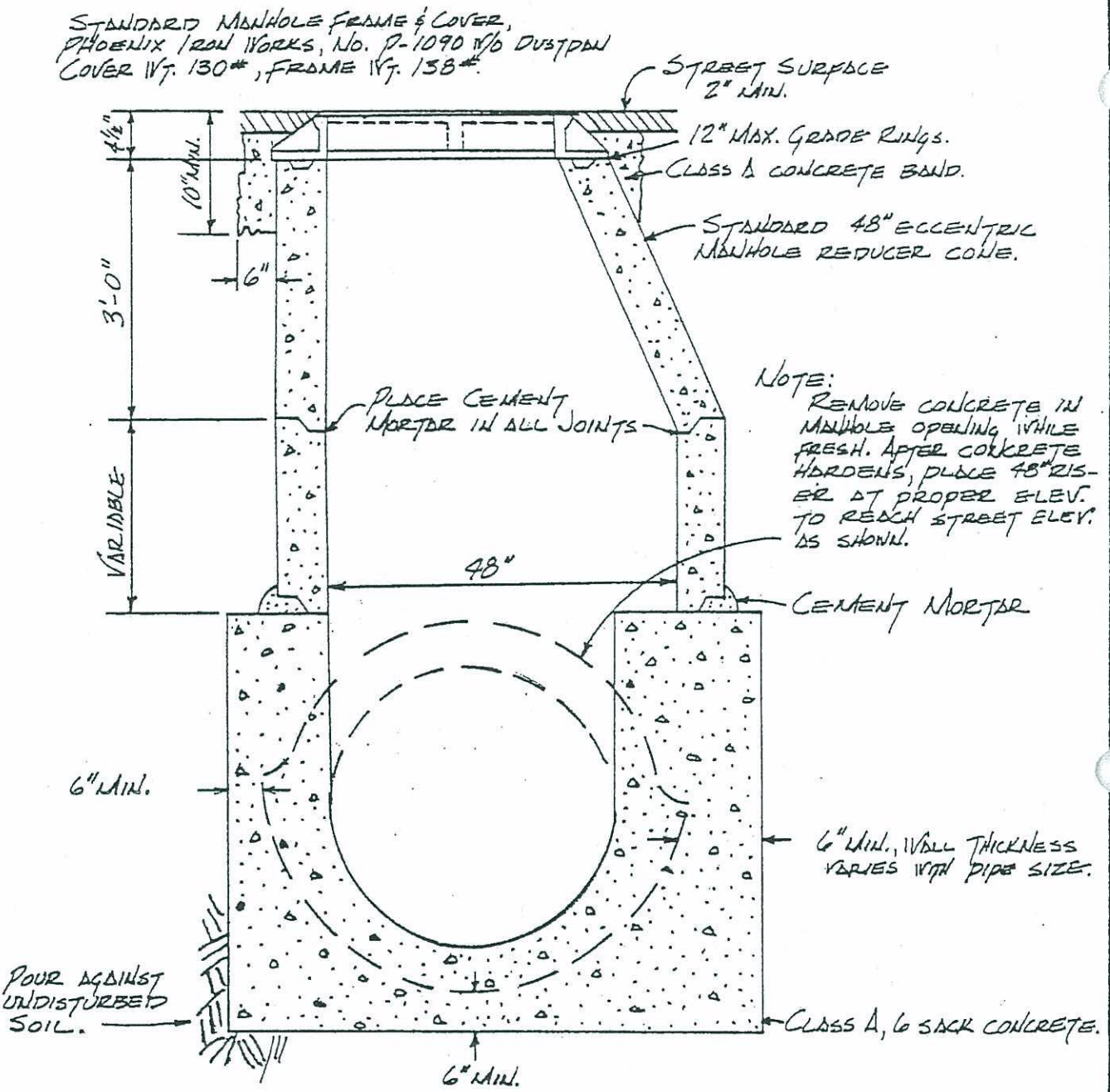

MANHOLE FRAME TO BE SLOPED TO MATCH STREET GRADE.
MACHINED SURFACES - RIM & FRAME.

COMMUNITY DEVELOPMENT DEPARTMENT
ENGINEERING DIVISION CITY OF ANTIOCH, CALIFORNIA

Drawn by: Tony Sokol	MANHOLE DETAIL - 48" AND UNDER, CAST IN PLACE CONCRETE PIPE	Approved by: S. E. Davis S.E. Davis RE 14298 City Engineer
Date: 2-20-75	CD - 45	Date: 6-1-75

MANHOLE FRAME TO BE SLOPED TO MATCH STREET GRADE.
MACHINED SURFACES – RIM AND FRAME.

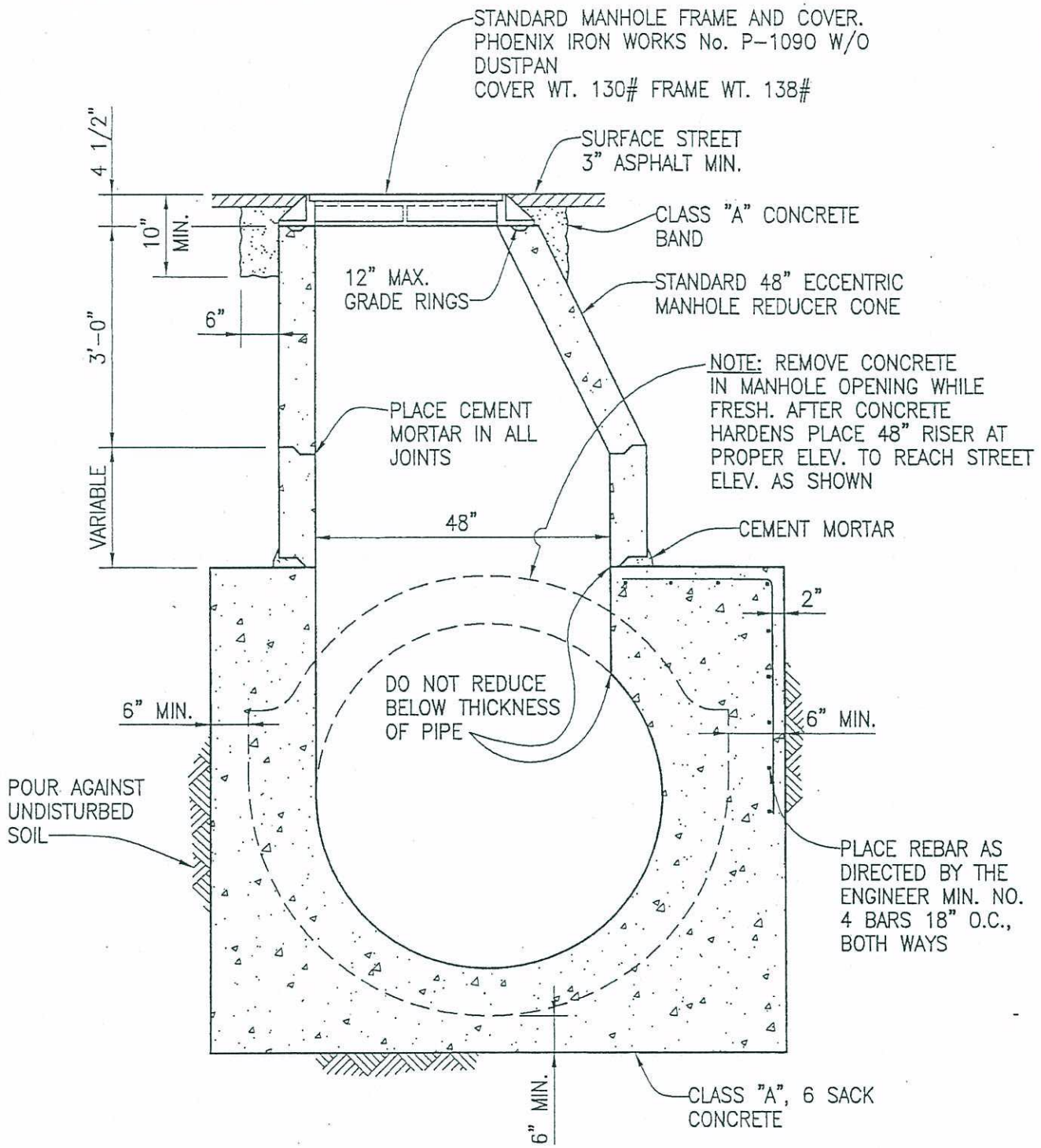

ENGINEERING SERVICES
CITY OF ANTIOCH

DRAWN BY: S. Rodriguez	**MANHOLE DETAIL – 52" AND OVER CAST IN PLACE CONCRETE PIPE**	APPROVED BY:
REVISIONS: 4/28/05		J.G. BRANDT CITY ENGINEER
	CD – 46	DATE: 6/7/05

c:\temp\cd-46.dwg

IF INSTALLED IN A PRESENT OR FUTURE STREET AREA USE REINF. CONC. DECK AS SHOWN. OTHERWISE USE 1/4" CHECKERPLATE COVER SUPPORTED BY 2"×2"×1/4" ANGLE IRON 2' c-c ACROSS THE SHORT SPAN.

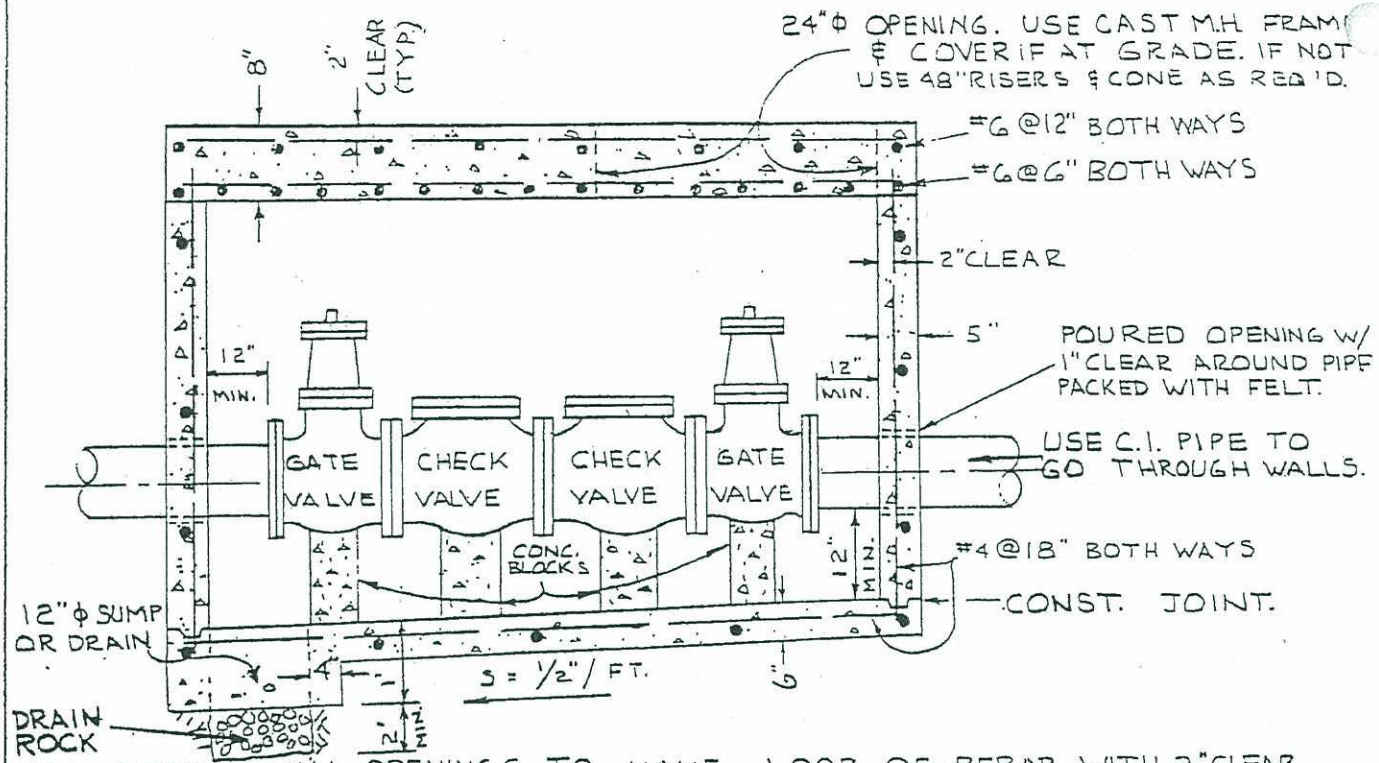

ALL DECK & WALL OPENINGS TO HAVE LOOP OF REBAR WITH 2" CLEAR ALL AROUND. FOR DECK USE #6 BAR (2 LAYERS); FOR WALL USE #4 BAR (ONE LAYER.)

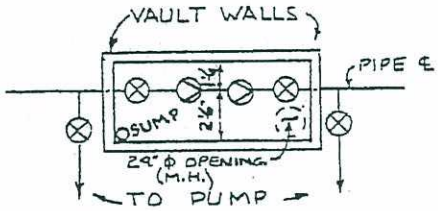

PLAN VIEW
NO SCALE

GATE VALVES TO BE MUELLER TYPE A-2380 WITH "O" RING SEALS OR EQUAL. ONE END TO BE FLANGED. THE OTHER TO MATCH TYPE OF PIPE.

CHECK VALVES TO BE MUELLER TYPE A-2600 OR A-2602 OR EQUAL. ANY CHECK VALVE USED MUST HAVE EXTERNAL POSITION INDICATOR.

MINIMUM FLOOR TO CEILING HEIGHT 6'-3".

VAULT MAY BE CONST. IN PLACE OR PRECAST CHRISTY VAULT NO. MV-4066-70 W/ REINF. LID OR EQUAL. THE BOTTOM SHALL BE POURED SEPARATELY. A LARGER VAULT THAN MV-4066-70 MAY BE REQUIRED DEPENDING ON THE SIZE OF THE FITTINGS.

SUMP MAY BE DRAIN ROCK OR P.C.C. HOLE AS DIRECTED BY ENGINEER.

CONC. BLOCKS UNDER VALVES TO BE REMOVABLE

COMMUNITY DEVELOPMENT DEPARTMENT
ENGINEERING DIVISION CITY OF ANTIOCH, CALIFORNIA

DRAWN BY: G.C. REDMOND DATE: DEC. 31, 1970	PUMP STATION CHECK VALVE ASSY. CD - 47	APPROVED BY: S. E. DAVIS R.E. 1429 CITY ENGINEER DATE: 1-26-71

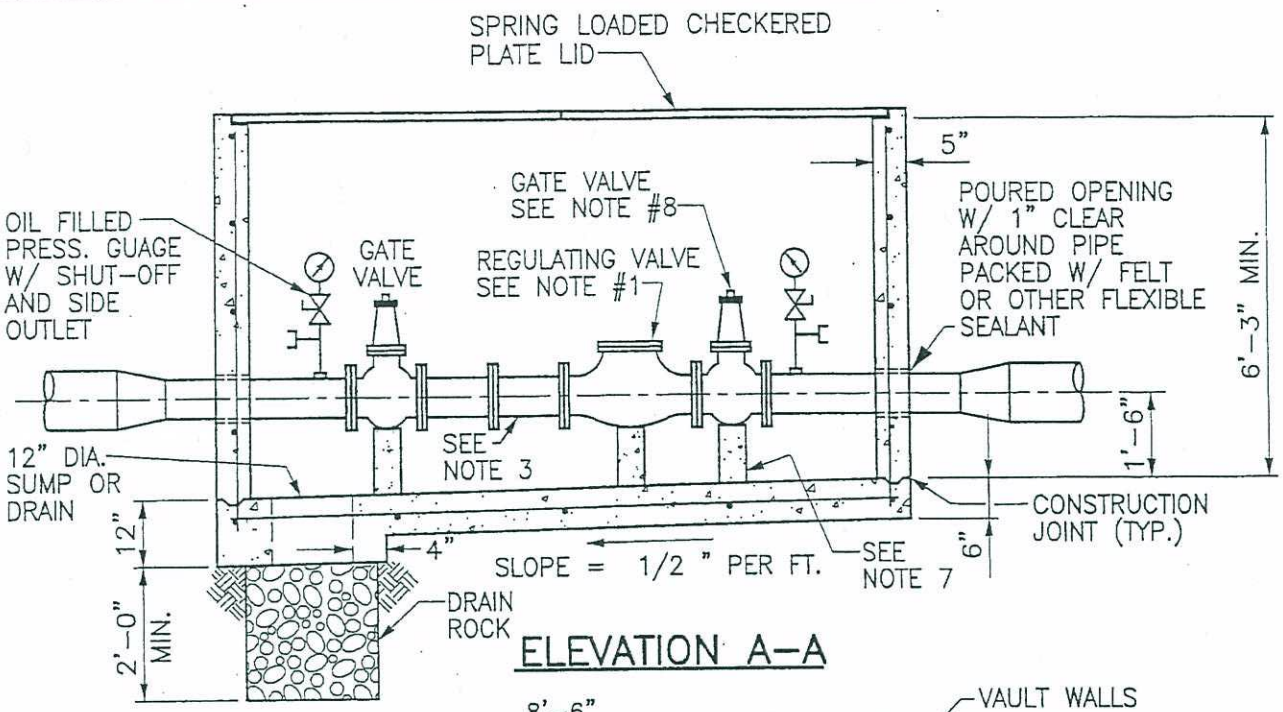

ELEVATION A–A

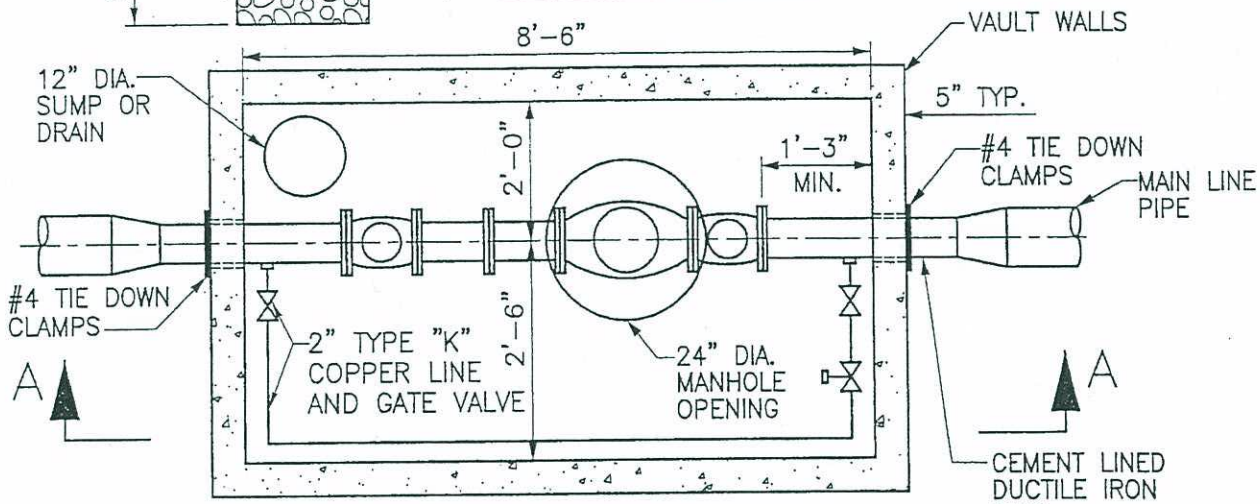

PLAN

NOTES:

1. WATTS A–910 (WITH OIL FILLED GAUGES AND BALL VALVE SHUT OFF INSTALLED) OR EQUAL TYPE VALVE WITH CITY APPROVAL.
2. VALVES MUST HAVE EPOXY COATED OR STAINLESS STEEL BODIES AND BONNETS.
3. "CAST IRON SPOOL FLANGE BY FLANGE".
4. REGULATING VALVES SHALL NOT BE INSTALLED IN THE STREET RIGHT OF WAY EXCEPT WITH THE APPROVAL OF THE CITY ENGINEER OR PUBLIC WORKS DIRECTOR.
5. PITS SHALL BE OF CHRISTY "R" SERIES TYPE WITH SPRING LOADED LIDS IN NON TRAFFIC AREAS. (SUBMIT FOR CITY ENGINEER APPROVAL)
6. REMOVABLE CONCRETE OR METAL JACK SUPPORTS.
7. GATE VALVES MUST BE RESILIENT SEAT.
8. DUCTILE IRON PIPE MUST BE RESTRAINED AGAINST OUTSIDE OF PIT USING UNDERGROUND TYPE CLAMPS TO PREVENT MOVEMENT DURING REPLACEMENT OF PRESSURE VALVE.

ENGINEERING SERVICES
CITY OF ANTIOCH

DRAWN BY: S. Rodriguez	PRESSURE REGULATING STATION	APPROVED BY:
REVISIONS: 4/28/05		J.G. BRANDT CITY ENGINEER
	CD–47A	DATE: 7/12/05

p:\pw standard drawings\pw-47a.dwg

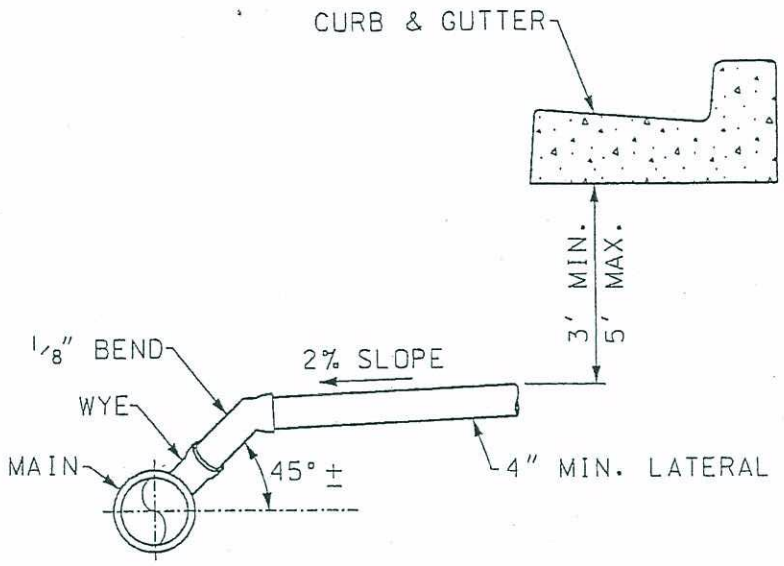

ELEVATION

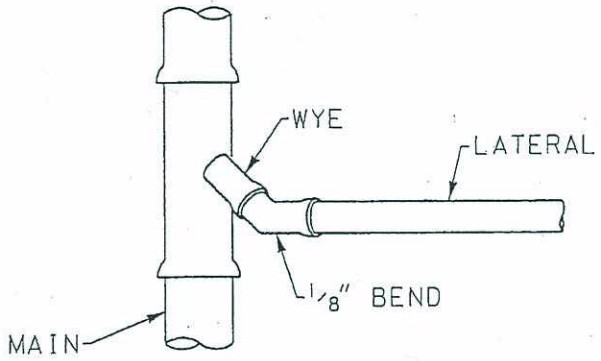

PLAN

DEPARTMENT OF PUBLIC WORKS
ENGINEERING SERVICES CITY OF ANTIOCH

DRAWN BY: MAC	SEWER LATERAL WYE INSTALLATION CD-48	APPROVED BY: J.G. BRANDT CITY ENGINEER DATE: 8/25/99
REVISIONS:		

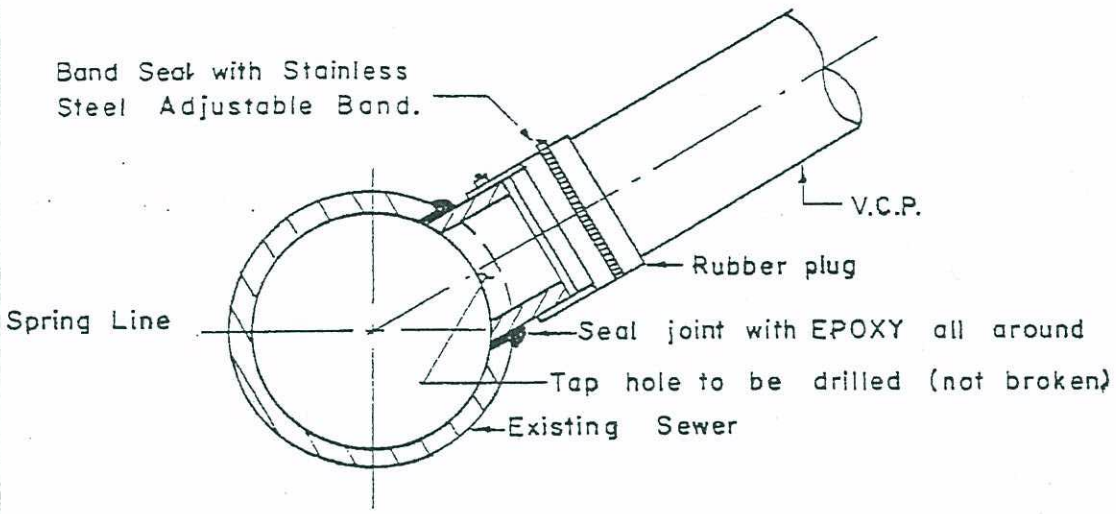

SHURE-TAP

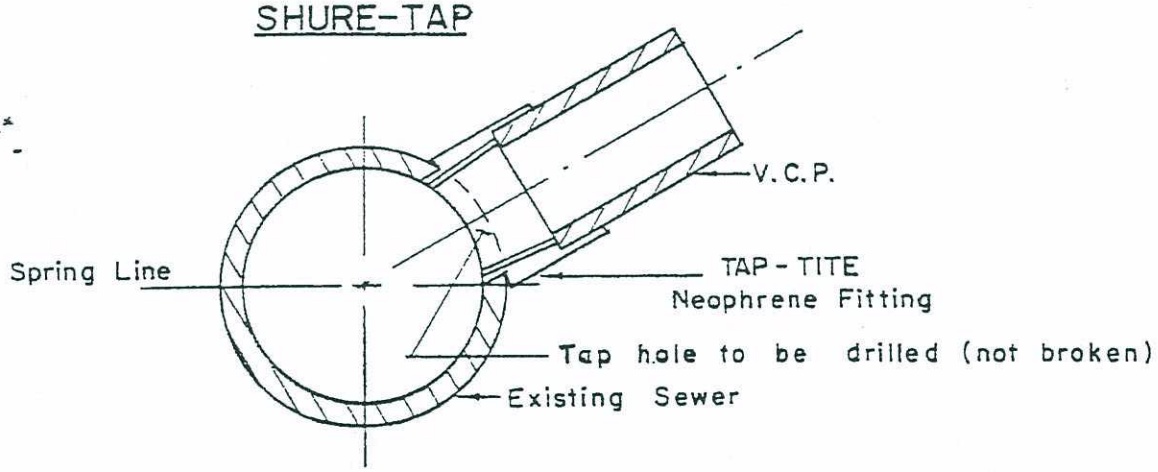

TAP-TITE

Notes:- 1. Tapping method shall be SHURE-TAP, TAP-TITE or equal approved by Engineer.
2. No tap shall be allowed into existing sewer less than 6" dia., or 18" dia. or larger.
3. Use of prefabricated wye's must be approved by Engineer.

COMMUNITY DEVELOPMENT DEPARTMENT
DIVISION OF ENGINEERING CITY OF ANTIOCH, CALIFORNIA

Drawn by W.G. Date 4-5-72	SEWER MAIN LATERAL TAP CD-49	APPROVED BY S.E. Davis S.E. DAVIS R.E. 14298 CITY ENGINEER Date 5-1-72

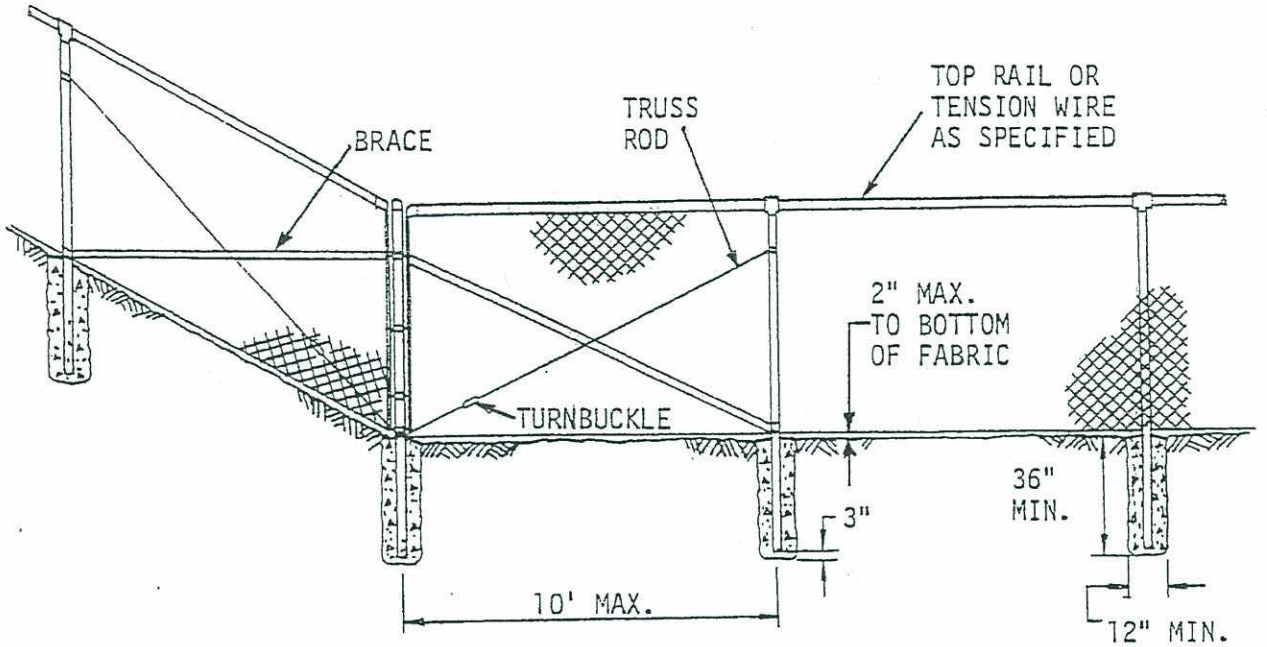

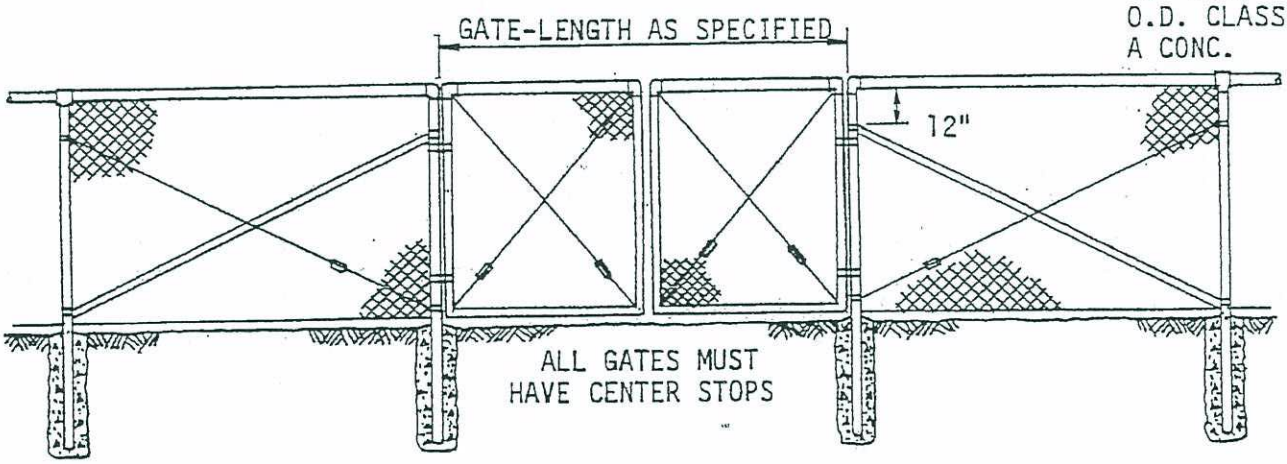

TYPICAL MEMBER DIMENSIONS

HEIGHT	LINE POSTS	TERMINAL POSTS	TOP RAIL & BRACES	GATE Gate Width	POSTS Round (Nom.ID
Less Than 6'	1 1/2" Nom.ID	2" Nom. ID	1 1/4" Nom.ID	Up Thru 6'	2 1/2"
	2.72 Lbs./L.F.	3.65 Lbs./L.F.	2.27 Lbs./L.F.	7' Thru 13'	3 1/2"
STANDARD C LINE POSTS	2.34 Lbs./L.F.	OUTSIDE DIMENSIONS = 1.875" x 1.625"		14' Thru 18'	6"
6' and Over	2" Nom. ID	2 1/2" Nom. ID	1 1/4" Nom. ID	Up Thru 6'	3"
	3.65 Lbs./L.F.	5.79 Lbs./L.F.	2.27 Lbs./L.F.	7' Thru 13'	4"
				14' Thru 18'	6"

COMMUNITY DEVELOPMENT DEPARTMENT
DIVISION OF ENGINEERING CITY OF ANTIOCH, CALIFORNIA

DRAWN BY: DOUG BROWN DATE: 5/31/74 REV. BY: M.B. IGNACIO DATE: 9/4/79 REV. BY: DATE :	CHAIN LINK FENCE DETAIL CD-53	APPROVED BY: S.E. DAVIS R.E.1429 City Engineer DATE: 5-31-74

City of Antioch
Standard Specification for Chain Link Fencing Materials

Chain Link Fence and Gates

All materials shall conform to Section 80-4 of the Standard Specifications except as modified herein by these Special Provisions.

HEIGHT: Standard fence heights to be sixteen (16) feet high, eight (8) feet high, six (6) feet high, four (4) feet high and three (3) feet high, above grade when erected as shown on the plans and details.

GALVANIZED FABRIC: Galvanized chain link wire, heavily zinc coated by hot-dip process after weaving, 11 ga. up to 84", over 84" use 9 ga., woven in a 2-inch mesh. Top and bottom salvages to have knuckled finish.

Wire pickets, of which this fabric is made, shall be of good commercial quality steel and shall stand a tensile strength test of 80,000 lbs. per square inch based on the cross-sectional area of the galvanized wire.

Chain link fabric to have a minimum coating of 2.0 oz. of zinc per sq. ft. Test for coating to be made on a section of wire picket 24 inches long per ASTM-A90.

FABRIC WITH REDWOOD PICKETS: Clear Heart Redwood Standard Grade A stained pickets 3/8" X 2-1/2" inserted vertically in each mesh of the chain link fabric.

Chain link wire, Class 111, 0.80 oz. zinc coating per ASTM A-116, #9 gauge woven in a 3-1/2" X 5-1/2" mesh. Top and bottom salvage furnished in knuckled finish.

VINYL-CLAD FABRIC: Chain link fence shall be as manufactured by Colorguard Corporation, 1 Johnson Drive, Raritan, New Jersey, 08869, under trade name of "COLORBOND", made in U.S.A. in accordance with U.S. Gov't. Spec. RR-F-191 Type IV, or approved equal. Color shall be Sherwood Green-Munsell Color System No. 2-1/2G-2.3/3.5 or approved equal. The bidder shall submit samples of the fencing to be used, upon request of the City Engineer.

Fabric shall be 2" coated woven wire mesh with knuckled finish top and bottom. Base metal shall be medium high quality carbon steel wire, tensile strength, 100,000 psi for 9 ga., hot-dip galvanized to A.I.S.I. Specifications. Type 1 coating weight from slab zinc conforming to ASTM Spec. B6. the wire shall be vinyl-clad before weaving by the thermal extrusion process under pressures to 5,000 psi, to insure a dense and impervious covering free of voids, having a smooth lustrous surface.

Resin coating shall be "Bakelite" plasticized polyvinyl chloride (PVC) with suitable non-migratory low temperature plasticizer, shall not support fire combustion, and insulated for 12,000 volts, or equal. Colors shall be stabilized and shall withstand a minimum weatherometer exposure test of 2,000 hours without deterioration. The vinyl covered wire shall withstand an accelerated aging test of a minimum of 2,000 hours at 145°F, without any cracking or peeling and shall exhibit a maximum shrinkage of 1/16 inch per 12 inches. The vinyl-clad chain link fabric shall withstand a mandrel bend test (10 x o.d. on wire at minus 50°C) without cracking.

LINE POSTS: Hot dip galvanized pipe 2" nominal diameter - 3.65 lbs. per lineal foot for fences 6 feet high or over and 1-1/2" nominal diameter - 2.72 lbs. per lineal foot for fences less than 6 feet high.

TERMINAL POSTS: End, corner, gate and pull posts hot-dip galvanized pipe 2-1/2" nominal diameter - 5.79 lbs. per lineal foot for fences 6 feet high and over and 2" nominal diameter - 3.65 lbs. per lineal foot for fences less than 6 feet high.

POST SPACING: Posts to be spaced in line of fence not farther apart than 10 ft. centers and shall be spaced at even intervals, except the posts for the 16-foot chain link fence shall have 8 ft. centers.

POST SETTING: All posts to be set 36 inches in concrete footings of not less than 12 inches in diameter and crowned at the top to shed water. The outer edges of concrete footings shall be flush to existing ground.

TOPS: All posts to be fitted with heavy ornamental tops approved by the City Engineer. Base of top to carry apron around outside of post, and shall be securely fastened to posts.

TOP RAIL: Hot-dip galvanized pipe 1-1/4" nominal diameter, weight 2.27 lbs. per lineal foot; provided with couplings approximately every 20 feet. Couplings to be outside sleeve type and at least 7 inches long. Top rail to pass through base of line post tops and form a continuous brace from end to end of each stretch of fence. Top rail to be securely fastened to terminal posts by pressed steel connections, approved by the City Engineer.

TRUSS RODS: Hot-dip galvanized 3/8" steel rods with galvanized turnbuckles.

TIE WIRES: Tie wires shall conform to Section 80-4.01C of the Standard Specifications.

BRACES: Hot-dip galvanized. Brace material same as top rail, to be installed as shown on the chain link fence installation detail. Turnbuckles on truss rods shall be tied with tie wires to fence fabric to prevent loosening by vandals.

TENSION WIRE: A No. 7 gauge galvanized coiled spring wire to be stretched along bottom of chain link fabric approximately 6 inches above grade. The chain link fabric to be attached to this wire with tie wires spaced 24 inches apart.

FITTINGS: Hot-dip galvanized. All fittings to be malleable, cast iron or pressed steel.

FABRIC BANDS: Fabric to be fastened to line posts with fabric bands spaced approximately 14 inches apart, and to top rail with tie wires spaced approximately 24 inches apart.

GATES: Gate frames to be made of 1-1/2" nominal diameter hot-dip galvanized pipe, weight 2.72 lbs. per lineal foot. Corner fittings heavy pressed steel or malleable castings. Fabric same as fence. Gates to be complete with malleable iron ball and socket hinges, catch, stops, and center rest. Hinges to permit gate to swing back against fence - 180°. Gate sizes given are from gate post to gate post. All gates shall include locks. All locks shall be as approved by the City Engineer.

FRAMEWORK MATERIAL: All posts, rails and braces heavily hot-dip galvanized.

GALVANIZING: All galvanizing shall be a minimum of 2.0 oz. per sq. ft. Imperfectly galvanized materials or materials upon which abrasions of the galvanizing have occurred shall be rejected by the Engineer. All rejected material must be removed from the job site within 24 hours after notice of such rejection to the contractor.

CERTIFICATES OF COMPLIANCE: Suppliers of any or all materials shall furnish a certificate stating the required specifications and the compliance of materials to specifications.

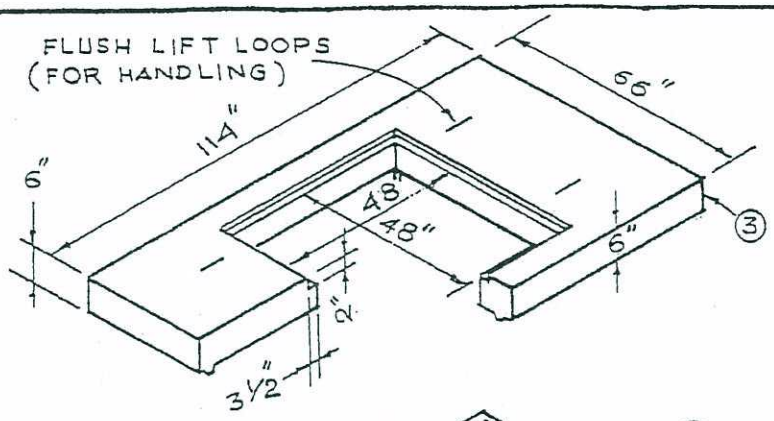

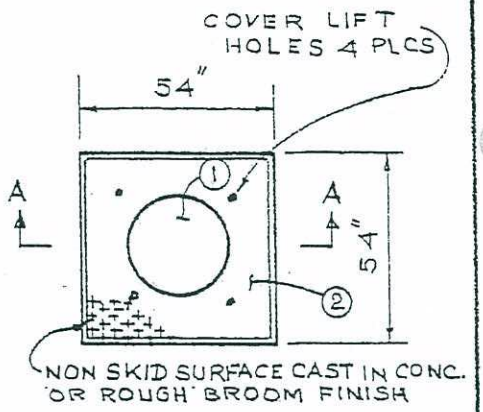

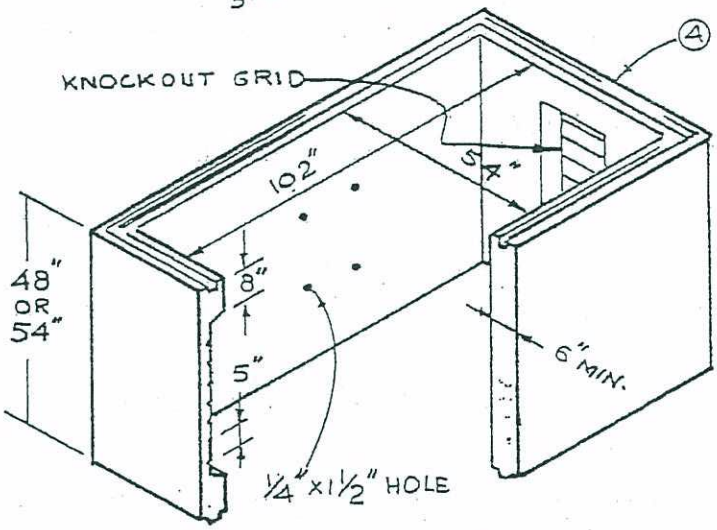

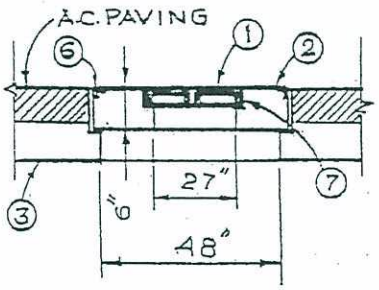

SECTION A-A

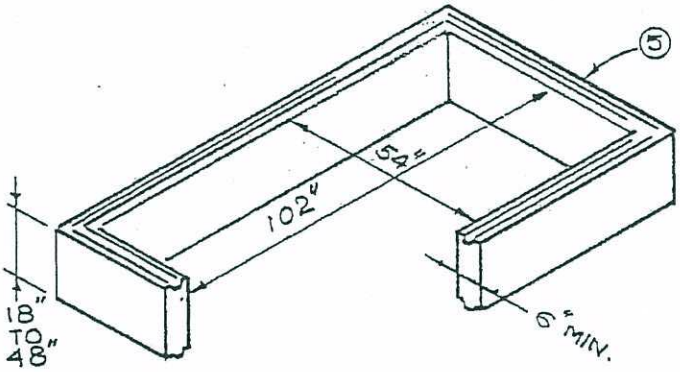

NOTES

1. C.I. LID ALH FDRY-A-1105 OR EQUAL.
2. BROOK NO. YC-350-2 (COVER) OR EQUAL.
3. BROOK NO. W-510-9 (TOP SLAB) OR EQUAL.
4. BROOK NO. M-510 (CENTER SECTION) OR EQUAL.
5. BROOK NO M-510 (EXTENSION SECTION) OR EQUAL.
6. STEEL FRAME CAST IN CONCRETE.
7. C.I. FRAME CAST IN CONCRETE.
8. REINFORCED CONCRET BASE.

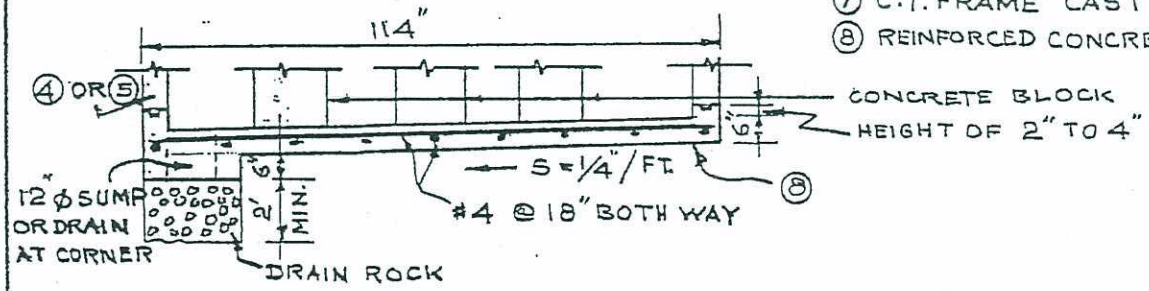

COMMUNITY DEVELOPMENT DEPARTMENT
DIVISION OF ENGINEERING, CITY OF ANTIOCH, CALIFORNIA

Drawn by W.G. Date 5-14-73	4'-6" X 8'-6" CONCRETE VAULT FULL TRAFFIC WITH 6" WALLS CD -54	APPROVED BY S.E. DAVIS R.E. 14298 CITY ENGINEER Date 6-15-73

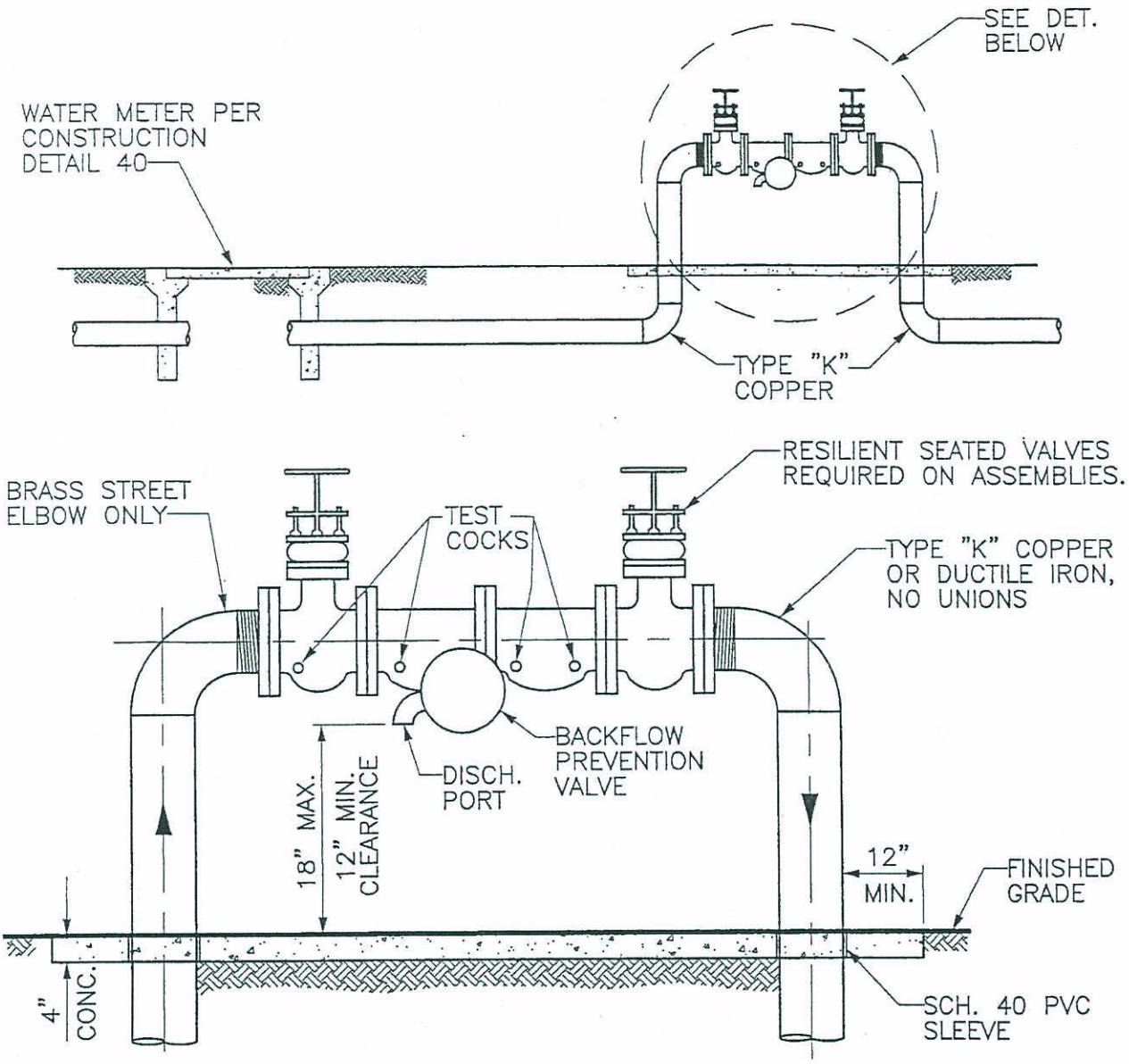

NOTES:

1. BACKFLOW ASSEMBLY USED MUST BE ON THE MOST CURRENT CITY OF ANTIOCH LIST AND HAS BEEN APPROVED BY THE CITY ENGINEER.
2. DISCHARGE PORT MUST BE KEPT CLEAR OF OBSTRUCTIONS AT ALL TIMES.
3. SIZE OF SPLASH PAD TO BE DETERMINED BY THE CITY ENGINEER.
4. ALL BACKFLOW PREVENTION DEVICE SHALL BE PAINTED w/ KELLY-MOORE PAINT NO. 93-224 AN.
5. BACK FLOW ASSEMBLY MUST BE "Y" PATTERN.
6. ALL BACKFLOW DEVICES SHALL HAVE RECEPTACLE SEATS.
7. 2" OR SMALLER SHALL USE COPPER CM 90.

ENGINEERING SERVICES
CITY OF ANTIOCH

DRAWN BY: S. Rodriguez REVISIONS: 4/28/05	**REDUCED PRESSURE BACKFLOW PREVENTER ASSEMBLY** **CD-55**	APPROVED BY: J.G. BRANDT CITY ENGINEER DATE: 6/7/05

p:\pw standard drawings\cd-55.dwg

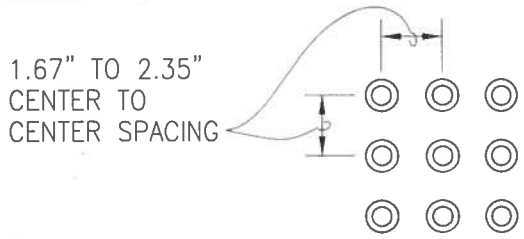

RAISED TRUNCATED DOME (IN-LINE) PATTERN DETECTABLE WARNING SURFACE

1. CURB RAMPS SHALL HAVE A DETECTABLE WARNING SURFACE THAT EXTENDS THE FULL WIDTH AND 3'-0" DEPTH OF THE RAMP. DETECTABLE WARNING SURFACES SHALL CONFORM TO THE DETAILS ON THIS PLAN
2. THE EDGE OF THE DETECTABLE WARNING SURFACE NEAREST THE STREET SHALL BE BETWEEN 6" AND 8" FROM THE GUTTER FLOWLINE
3. DETECTABLE WARNING PANEL SHALL BE ARMORTILE 36" x 48" PRODUCT No. ADA-S-3648-YW OR APPROVED EQUAL (FEDERAL YELLOW COLOR No. 33538)

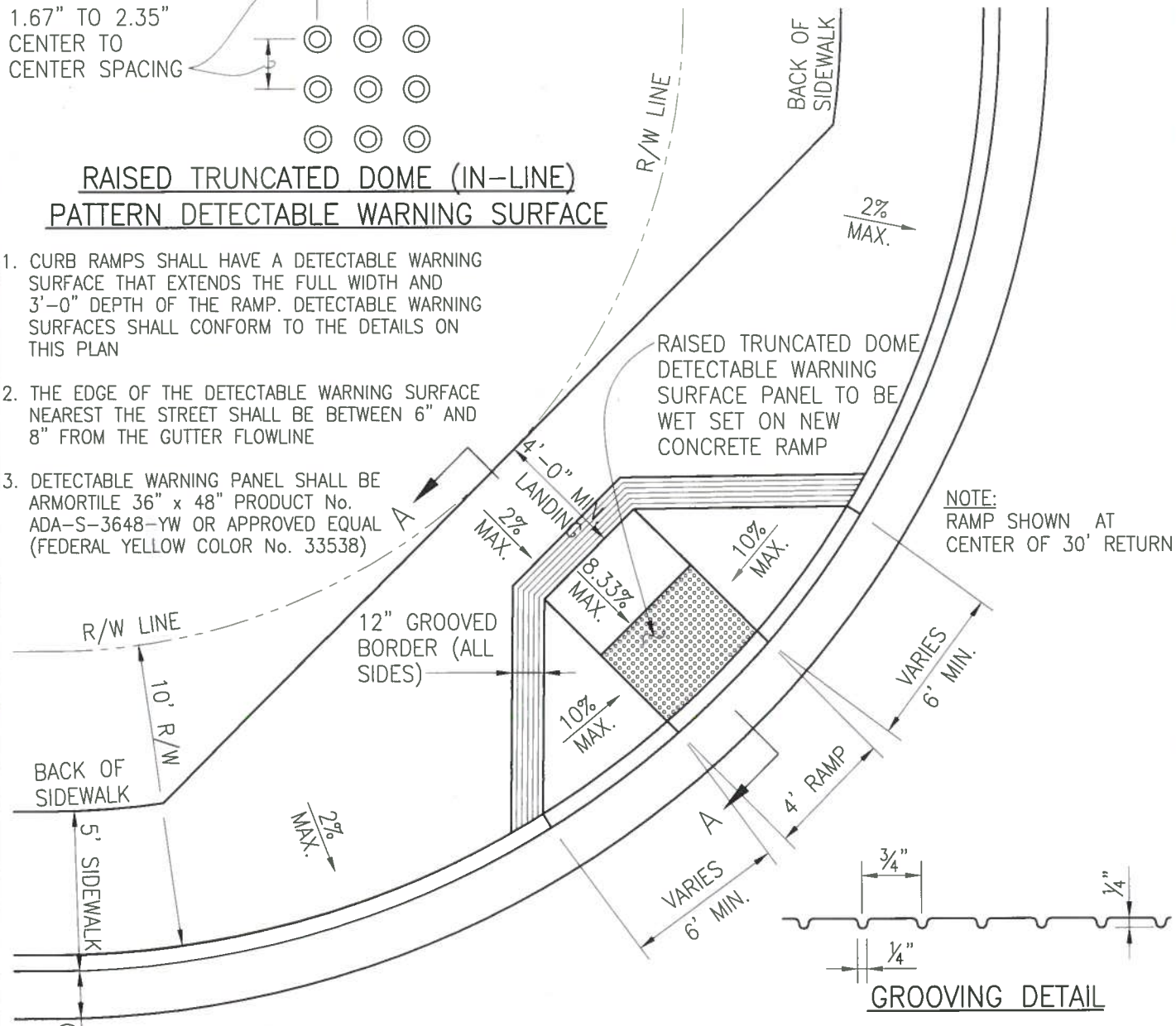

GROOVING DETAIL

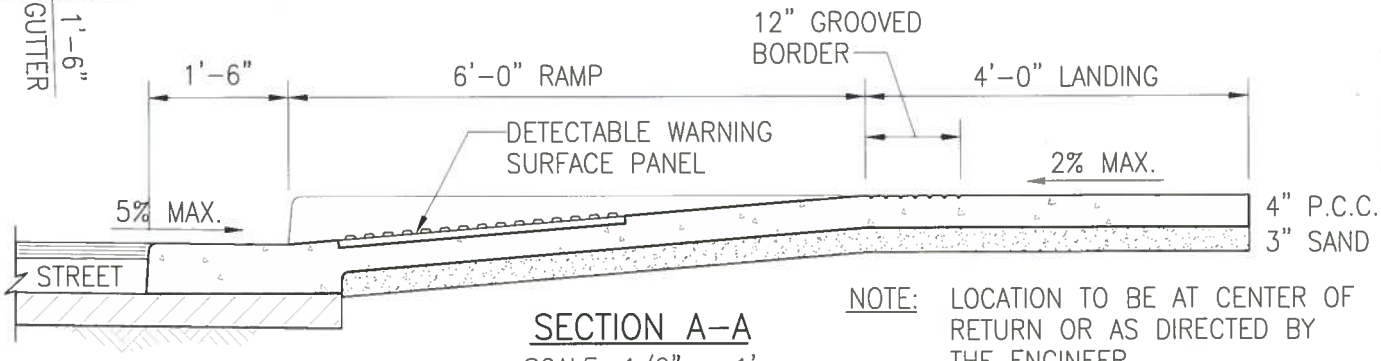

SECTION A-A

SCALE: 1/2" = 1'

NOTE: LOCATION TO BE AT CENTER OF RETURN OR AS DIRECTED BY THE ENGINEER

COMMUNITY DEVELOPMENT DEPARTMENT
ENGINEERING SERVICES CITY OF ANTIOCH

DRAWN BY: S. Rodriguez REVISIONS: 09/04/08 03/28/13 07/16/13	STANDARD SIDEWALK RAMP FOR PHYSICALLY DISABLED CD - 56	APPROVED BY: Ron Bernal RON BERNAL CITY ENGINEER DATE: 7/18/13

\\pw standard drawings\cd-56.dwg

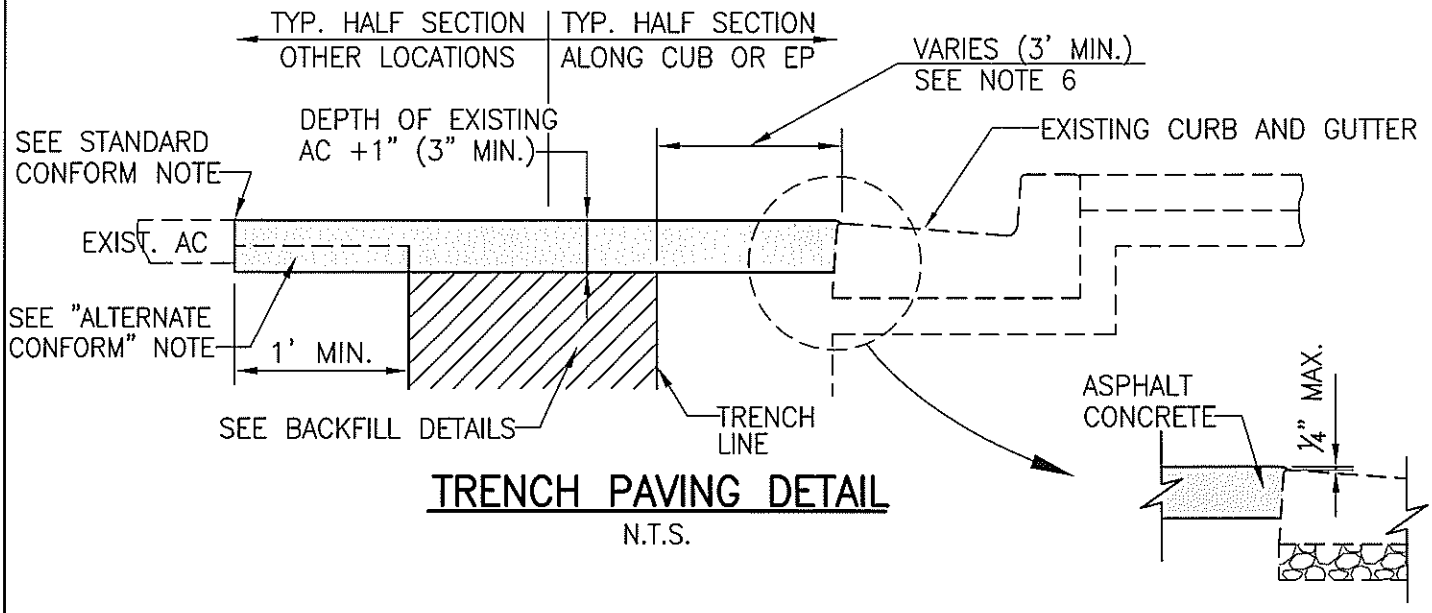

TRENCH PAVING DETAIL

N.T.S.

DETAIL A

GUTTER LIP PAVING

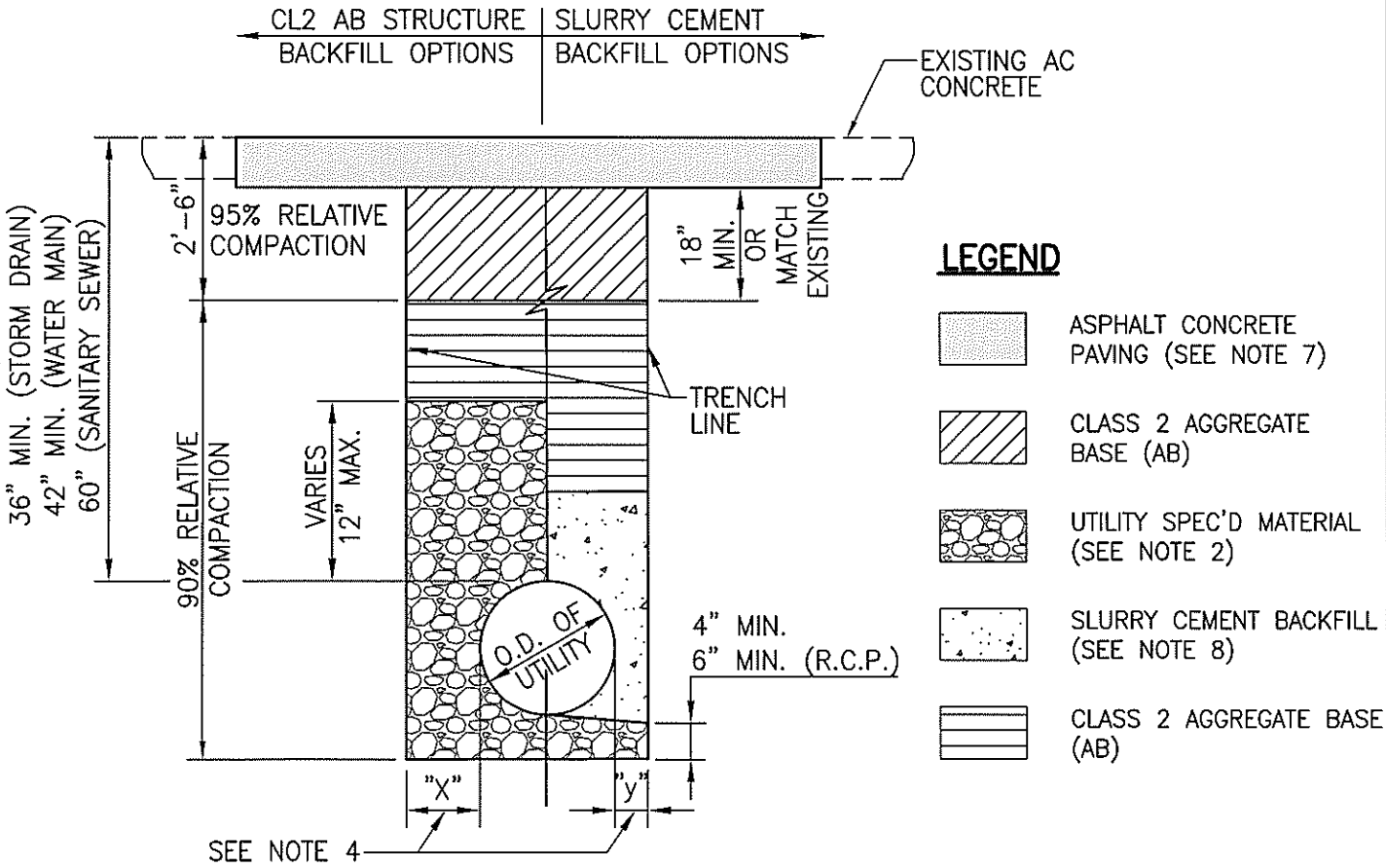

TRENCH BACKFILL DETAIL

N.T.S.

ENGINEERING SERVICES CITY OF ANTIOCH

DRAWN BY: S. Rodriguez REVISIONS: *REVISED 5/2014*	**UTILITY TRENCH CUT DETAILS**	APPROVED BY: Ron Bernal RON BERNAL, P.E. CITY ENGINEER DATE: 6/2/14
	CD-57 (1 OF 2)	

p:\pw standard drawings\cd-57 revised 3-14.dwg

CONFORM NOTES:

THE PAVEMENT CONFORM SHALL BE AS FOLLOWS

STANDARD CONFORM

THE ASPHALT CONCRETE SHALL BE CUT THROUGH THE FULL DEPTH OF EXISTING ASPHALT TO A NEAT STRAIGHT LINE AT LEAST 1' OUTSIDE THE TRENCH LINE. PAVEMENT EDGES DAMAGED DURING CONSTRUCTION SHALL BE RE-CUT TO NEAT LINES PRIOR TO PAVING. PAINT BINDER (TACK COOL) SHALL BE APPLIED TO ALL VERTICAL SURFACES IN ACCORDANCE WITH THE LATEST EDITION OF CALTRANS STANDARD SPECIFICATION.

ALTERNATE CONFORM

THE EXISTING ASPHALT CONCRETE OUTSIDE THE TRENCH LINE MAY BE GROUND TO A MINIMUM DEPTH OF 2 1/2" TO A NEAT STRAIGHT LINE AT LEAST 1' OUTSIDE THE TRENCH LINE. THE EXISTING ASPHALT CONCRETE AT THE TRENCH LINES SHALL BE CUT THROUGH THE FULL DEPTH OF THE EXISTING ASPHALT CONCRETE TO A NEAT STRAIGHT LINE, ANY PAVEMENT EDGES, INCLUDING GROUND EDGES, DAMAGED DURING CONSTRUCTION SHALL BE RE-CUT AND RE-GROUND TO NEAT LINES PRIOR TO PAVING. PAINT BINDER (TACK COAT) SHALL BE APPLIED TO ALL VERTICAL SURFACES IN ACCORDANCE WITH THE LATEST EDITION OF CALTRANS STANDARD SPECIFICATIONS.

NOTES FOR PIPE ZONE MATERIAL:

1. WATER MAIN (PVC) – USE SAND IN PIPE ZONE
2. SANITARY SEWER (VCP) – USE 1/2" – 3/4" CRUSHED STONE IN PIPE ZONE
3. STORM DRAIN (RCP) – USE 3/4" CRUSHED STONE UP TO SPRING LINE
4. HDPE – USE 3/4" CRUSHED STONE PLACED IN TREE STEPS:
   A. PLACE BEDDING AND VIBRA-PLATE
   B. PLACE CRUSHED STONE TO SPRING LINE AND
   C. PLACE 12" MIN. CRUSHED STONE OVER PIPE

GENERAL NOTES:

1. AN ENCROACHMENT PERMIT IS REQUIRED FOR ALL WORK WITHIN CITY RIGHT-OF-WAY. THE PERMIT SHALL BE OBTAINED PRIOR TO BEGINNING WORK.

2. BACKFILL MATERIAL AND ANY BEDDING MATERIAL SHALL BE AS SPECIFIED BY THE UTILITY OWNER, AND APPROVED BY THE PUBLIC WORKS DEPARTMENT. IN NO CASE SHALL "PEA" GRAVEL BE ALLOWED.

3. UNSUITABLE NATIVE MATERIAL SHALL BE EXCAVATED BELOW THE LIMIT OF EXCAVATION AND REPLACED WITH SUITABLE BACKFILL MATERIAL WHEN DIRECTED BY THE PUBLIC WORKS DEPARTMENT.

4. "X" AND "Y" SHALL BE AS A MINIMUM, THE DIMENSIONS SHOWN BELOW FOR THE UTILITY "O.D."

O.D.	"X"	"Y"
UNDER 1'	6"	3"
1' TO 4'-6"	1'	6"
OVER 4'-6"	2'	1'

5. MINIMUM COVER OVER NON-CITY UTILITIES IS GOVERNED BY THE CALIFORNIA PUBLIC UTILITIES COMMISSION. UTILITY OWNERS SHALL CONSIDER PLACING THEIR UTILITY LINE AT A GREATER DEPTH TO AVOID FUTURE RELOCATION DUE TO STREET/ROAD RECONSTRUCTION. THE INCREASED DEPTH SHOULD INCLUDE SUFFICIENT CLEARANCE BETWEEN THE UTILITY AND PAVEMENT STRUCTURAL SECTION SUBGRADE TO PREVENT DAMAGE BY CONSTRUCTION EQUIPMENT. THE PUBLIC WORKS DEPARTMENT RECOMMENDS A MINIMUM OF 4' OF COVER IN ARTERIAL ROADS AND 3' ELSEWHERE. IF COVER IS LESS THAN 2', A SPECIAL DESIGN IS REQUIRED WITH APPROVAL BY THE CITY ENGINEER.

6. WHERE THE TRENCH PARALLELS CURB AND THE NEAREST TRENCH LINE IS LESS THAN 3' FROM THE GUTTER LIP, ALL EXISTING ASPHALT CONCRETE SHALL BE REPLACED TO THE GUTTER LIP. FOR GUTTER LIP PAVING DETAIL SEE DETAIL "A".

7. ASPHALT CONCRETE SHALL BE 1/2" TYPE A ASPHALT CONCRETE UNLESS OTHERWISE SPECIFIED IN THE ENCROACHMENT PERMIT'S SPECIAL ROAD ENCROACHMENT PERMIT CONDITIONS OR AS DIRECTED BY THE CITY ENGINEER.

8. SLURRY CEMENT BACKFILL SHALL COMPLY WITH LATEST EDITION OF CALTRANS STANDARD SPECIFICATIONS.

ENGINEERING SERVICES CITY OF ANTIOCH

DRAWN BY: S. Rodriguez

REVISIONS: *REVISED 5/2014*

UTILITY TRENCH CUT DETAILS

CD-57 (2 OF 2)

APPROVED BY: Ron Bernal

RON BERNAL, P.E.

CITY ENGINEER

DATE: 6/2/14

p:\pw standard drawings\cd-57 revised 3-14.dwg

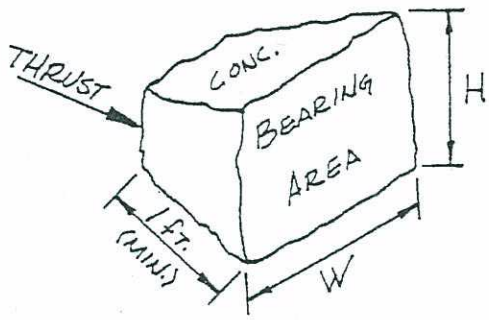

Bearing area - sq. ft. = width (W) x height (H).

Min. areas based on testing pressure of 150 psig with 1.5 safety factor.

Concrete shall be 5 sack mix and bear only against the cast iron fittings - not against the A.C. pipe.

BEARING AREA - SQ. FT					
SIZE	FITTING	ALLOWABLE SOIL BEARING			
		500 PSF	1000 PSF	2000 PSF	3000 PSF
6"	11-1/4°	2.5 Sq.Ft.	1.25 Sq.Ft.	.63 Sq.Ft.	.42 Sq.Ft.
	22-1/2°	5.0 "	2.5 "	1.25 "	.8 "
	45°	9.7 "	4.9 "	2.5 "	1.7 "
	90°	18.0 "	9.0 "	4.5 "	3.0 "
	TEE or PLUG	12.7 "	6.4 "	3.2 "	2.1 "
8"	11-1/4°	4.4 Sq.Ft.	2.2 Sq.Ft.	1.1 Sq.Ft.	0.74 Sq.Ft.
	22-1/2°	8.8 "	4.4 "	2.2 "	1.5 "
	45°	17.1 "	8.6 "	4.3 "	2.9 "
	90°	32.0 "	16.0 "	8.0 "	5.3 "
	TEE or PLUG	22.6 "	11.3 "	5.7 "	3.8 "
10"	11-1/4°	7.2 Sq.Ft.	3.6 Sq.Ft.	1.8 Sq.Ft.	1.2 Sq.Ft.
	22-1/2°	14.4 "	7.2 "	3.6 "	2.4 "
	45°	26.8 "	13.4 "	6.7 "	4.5 "
	90°	48.0 "	24.0 "	12.0 "	8.0 "
	TEE or PLUG	33.0 "	16.5 "	8.3 "	5.5 "
12"	11-1/4°	9.3 Sq.Ft.	4.7 Sq.Ft.	2.3 Sq.Ft.	1.6 Sq.Ft.
	22-1/2°	18.6 "	9.3 "	4.7 "	3.1 "
	45°	36.0 "	18.0 "	9.0 "	6.0 "
	90°	66.0 "	33.0 "	16.5 "	11.0 "
	TEE or PLUG	50.6 "	25.3 "	12.7 "	8.5 "

TYPICAL SOIL BEARING STRENGTHS:

DAMP SOFT CLAYS 0-500psf MEDIUM CLAY 2000psf
SOFT CLAY 1000psf COMPACT SAND 3000psf
psf = POUNDS PER SQUARE FOOT.

Community Development Department
Division of Engineering City of Antioch, California

Drawn by: Tony Sokol	MINIMUM THRUST BLOCK SIZES	Approved by: S.E. Davis R.E. 14298 City Engineer
Date: 6-10-75	CD-58	Date: 6-1-75

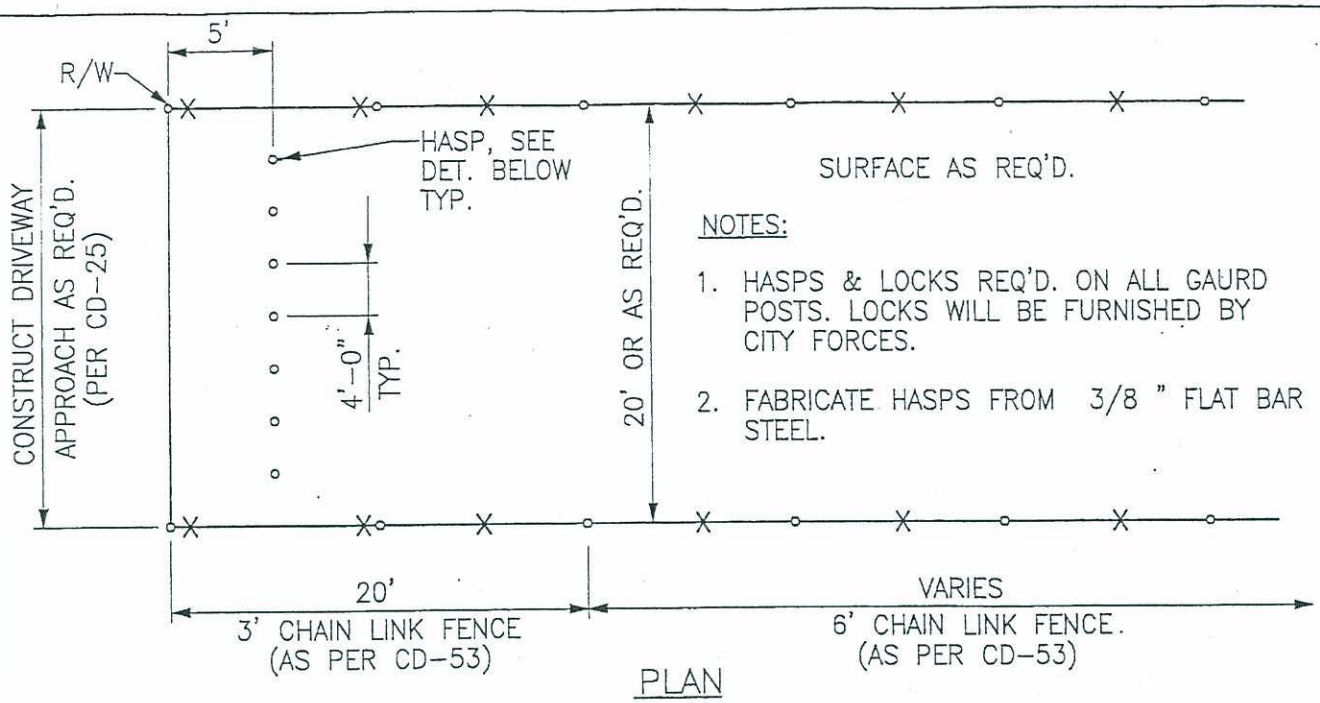

NOTES:

1. HASPS & LOCKS REQ'D. ON ALL GAURD POSTS. LOCKS WILL BE FURNISHED BY CITY FORCES.
2. FABRICATE HASPS FROM 3/8 " FLAT BAR STEEL.

PLAN

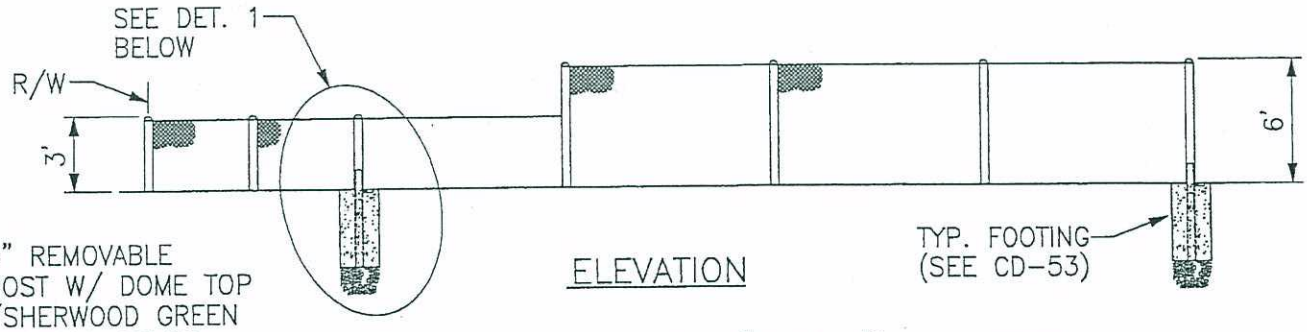

ELEVATION

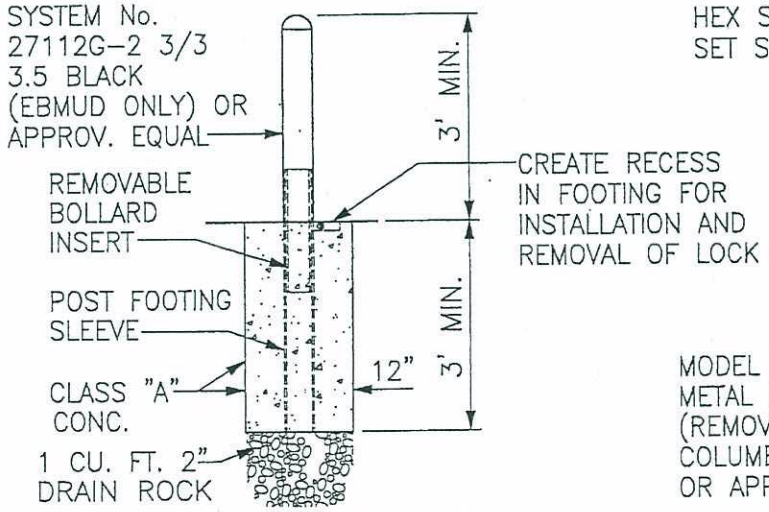

DETAIL 1

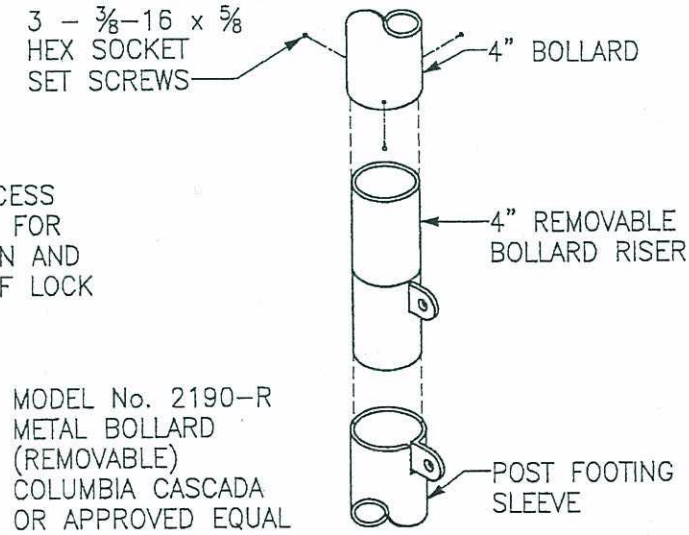

INSTALLATION DETAIL

DEPARTMENT OF PUBLIC WORKS
ENGINEERING SERVICES CITY OF ANTIOCH

DRAWN BY: S. Rodriguez	PATH GUARD POSTS	APPROVED BY:
REVISIONS:		J.C. BRANDT R.C.E. 26870 EXP. 3/31/05
	CD-59	CITY ENGINEER DATE: 6/9/04

z:\pw standard drawings\cd-59.dwg

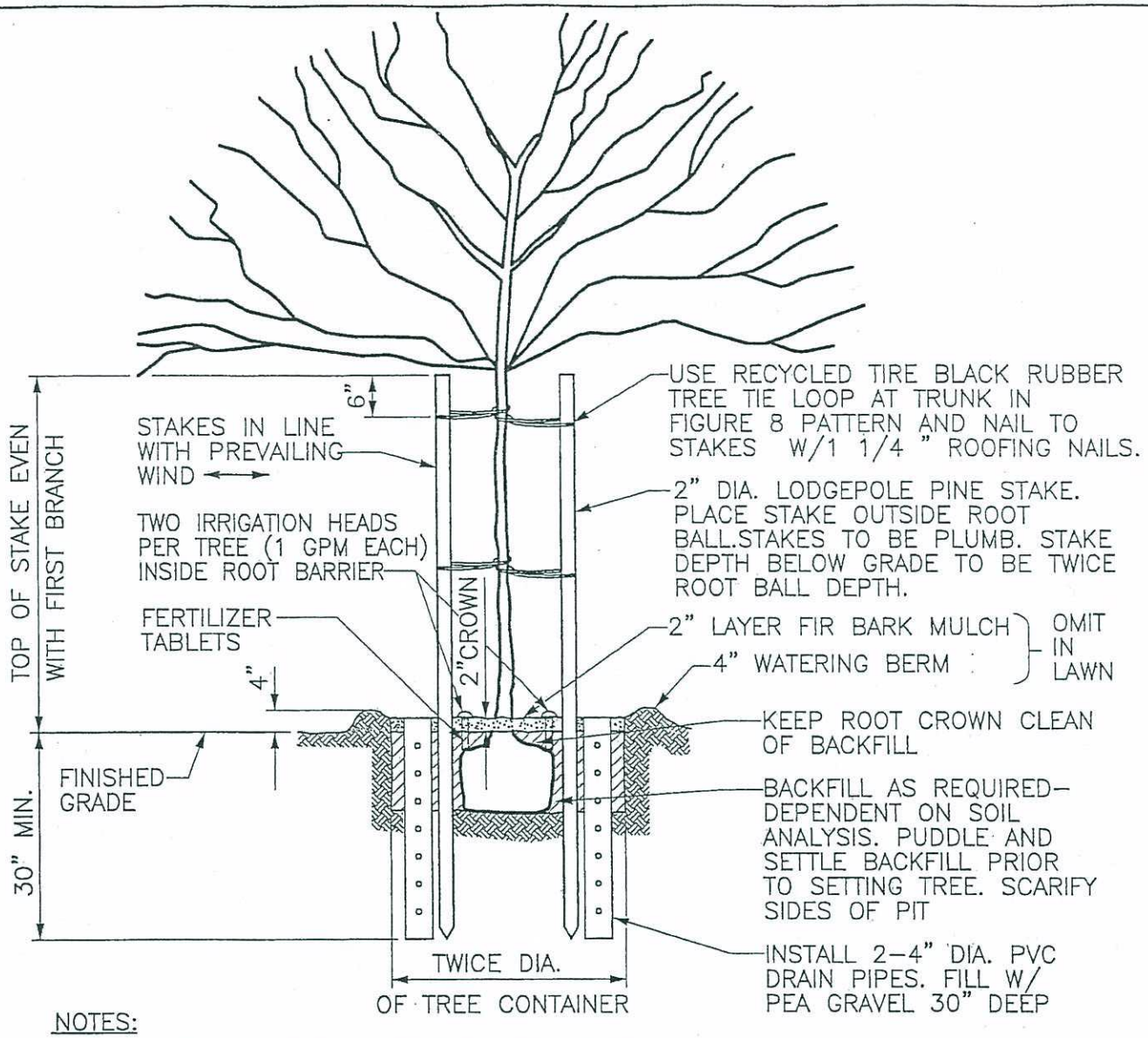

NOTES:

1. REMOVE ALL DEAD OR BROKEN BRANCHES.
2. REMOVE SUCKERS, LEAVE ANY SHORT BRANCHES ON TRUNK.
3. WORK ROOTS AWAY FROM ROOT BALL.
4. REMOVE NURSERY STAKES.
5. INSTALL ROOT BARRIER IF TREE IS LOCATED WITHIN 10' OF WALKWAY OR CURB. AND AT BACK OF CURB WITHIN CUL-DE-SAC PLANTER AREA.
6. 4' EXCAVATION REQUIRED BELOW TREE IF PLANTED IN MEDIAN OR CUL-DE-SAC.
7. ROOT BARRIER PANELS AT BACK OF CURB AND ALONG SIDEWALK 8' EACH WAY CENTER OF TREE.
8. PLACE ROOT BARRIER 24" DEEP AROUND ENTIRE PLANTER AT CUL-DE-SAC.

DEPARTMENT OF PUBLIC WORKS
ENGINEERING SERVICES CITY OF ANTIOCH

DRAWN BY: S. Rodriguez REVISIONS: 8/10/05	TREE STAKING CD-60	APPROVED BY: J.C. BRANDT CITY ENGINEER DATE: 8/22/05

p:\pw standard drawings\cd-60.dwg

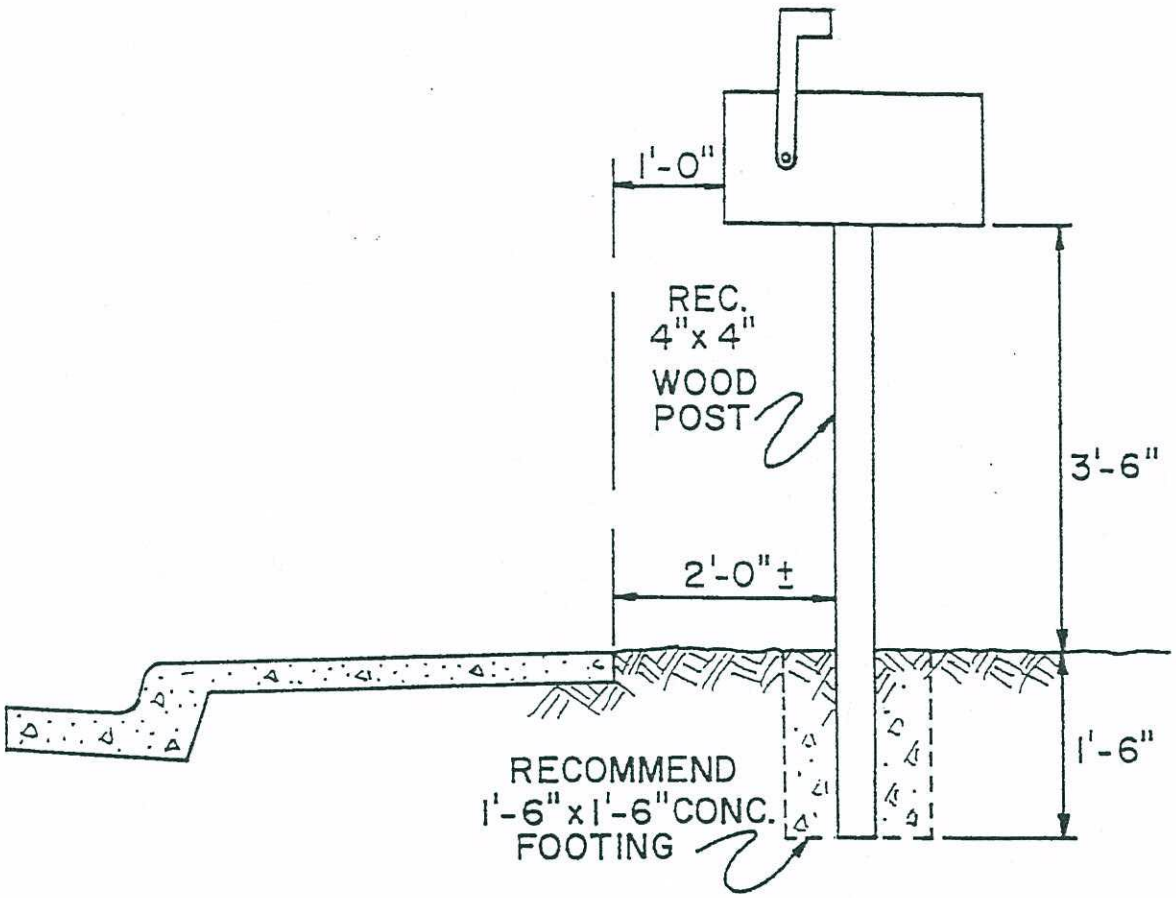

NOTES:

1. Maintain a minimum 3ft. horizontal clearance from FIRE HYDRANT to nearest edge of box.
2. 48hrs. prior to digging post hole, OWNER to contact USA CENTER 800-642-2444.
3. Mail box not to be constructed so that it overhangs any utility or water meter box.

Community Development Department

Division of Engineering — City of Antioch, California

Drawn by: Tony Sokol Date: 10·25·76 Rev. 9·26·89	MAIL BOX INSTALLATION CD-61	Approved by: S.E. Davis R.E. 14298 City Engineer 3-31-95 Date: 10-28-76

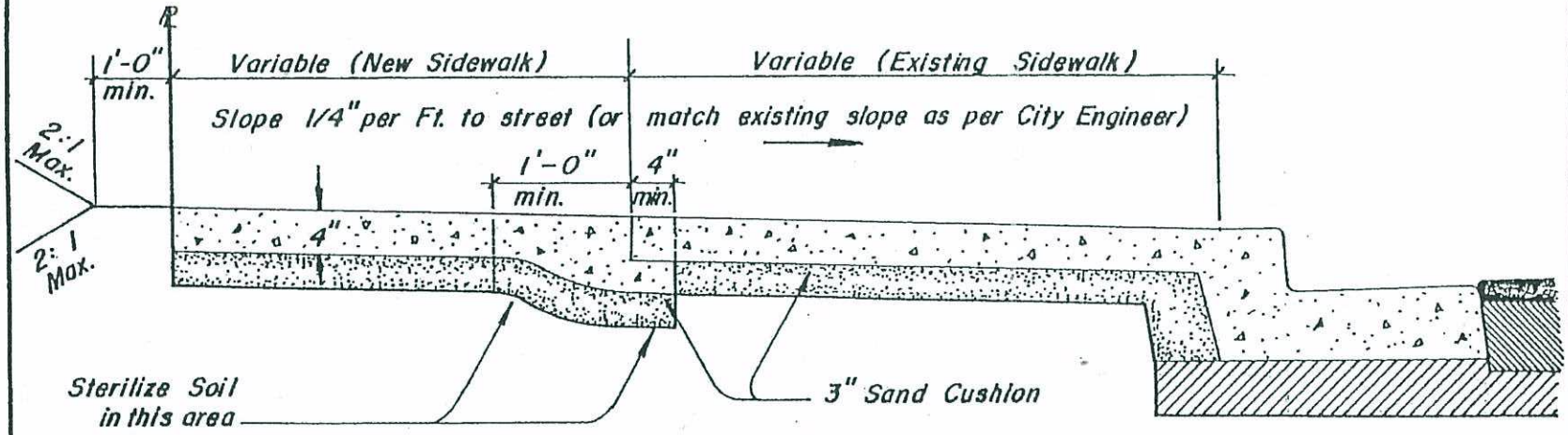

ADDITION BEHIND EXISTING SIDEWALK

NOTES:

1. All new concrete to be Class A (6 sack concrete per cubic yard)
2. Soil sterilant to be PRAMITOL 25E or equal as approved by the City Engineer

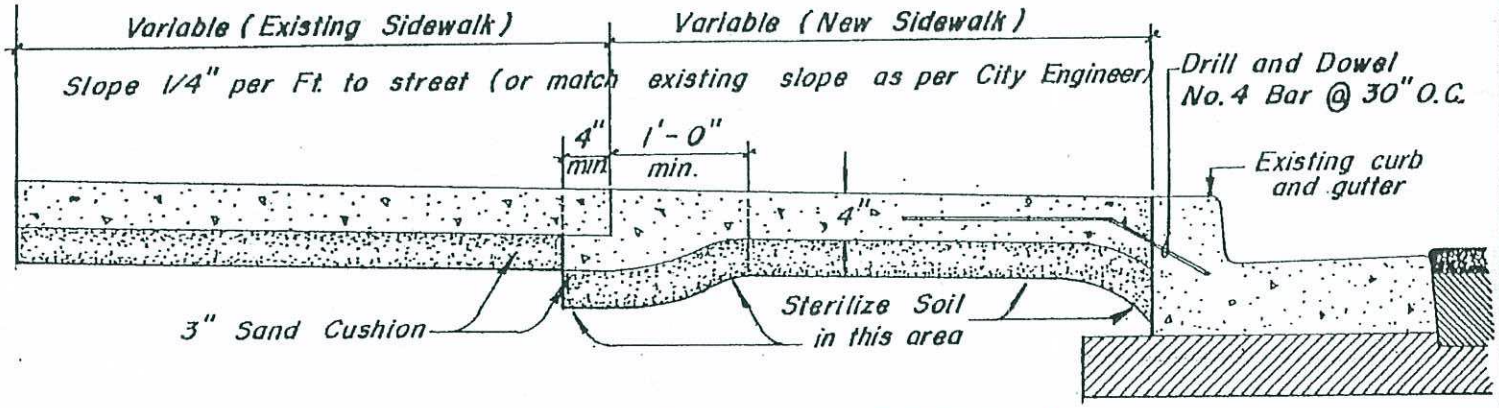

ADDITION BETWEEN CURB AND EXISTING SIDEWALK

PUBLIC WORKS DEPARTMENT

ENGINEERING DIVISION CITY OF ANTIOCH, CALIFORNIA

TYPICAL SIDEWALK WIDENING

CD - 62

Drawn By: M. B. IGNACIO
Date: April 23, 1979
Rev. By:
Date:

Approved By:
S. E. DAVIS R.E. 14298
CITY ENGINEER
DATE: 8-1-79

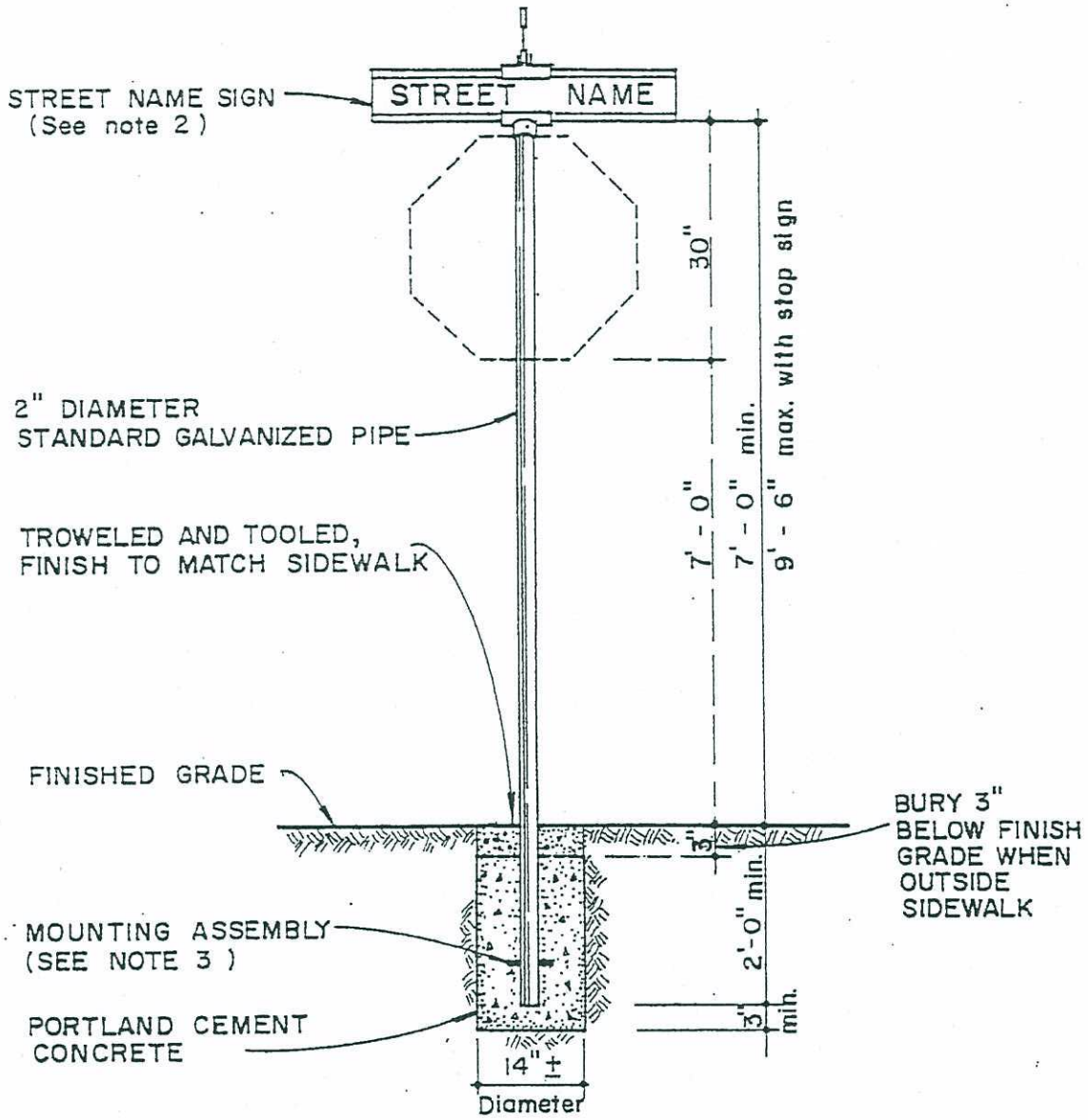

NOTES

1. SIGN LOCATION TO BE DETERMINED BY THE CITY ENGINEER.
2. NAME PLATES AND MOUNTING ASSEMBLIES TO MEET THE CITY, STREET SIGN SPECIFICATIONS (P.W. 118) UNLESS OTHERWISE APPROVED BY THE CITY ENGINEER.
3. SPOT WELD MOUNTING ASSEMBLY TO PIPE TO PREVENT TURNING.

Scale : 1/2" = 1'

PUBLIC WORKS DEPARTMENT

ENGINEERING SERVICES — CITY OF ANTIOCH, CALIFORNIA

Drawn By: Mayette Date : November 19, 1980 Rev. By: Date : Rev. By: Date :	STANDARD STREET NAME SIGN INSTALLATION CD - 63a	APPROVED BY: S. E. DAVIS R.E. 14298 CITY ENGINEER DATE: 3-2-81

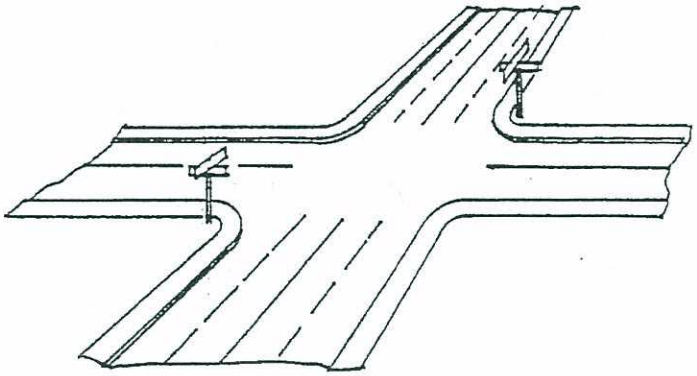

LOCATION AT MULTILANE ARTERIAL INTERSECTION

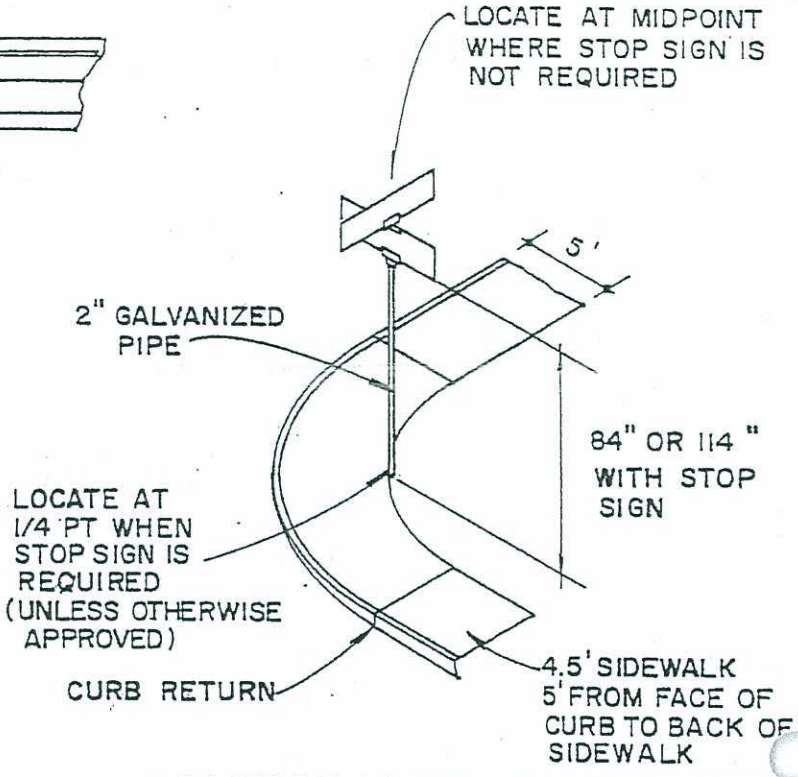

LOCATION IN 4.5 FT. MONOLITHIC SIDEWALK

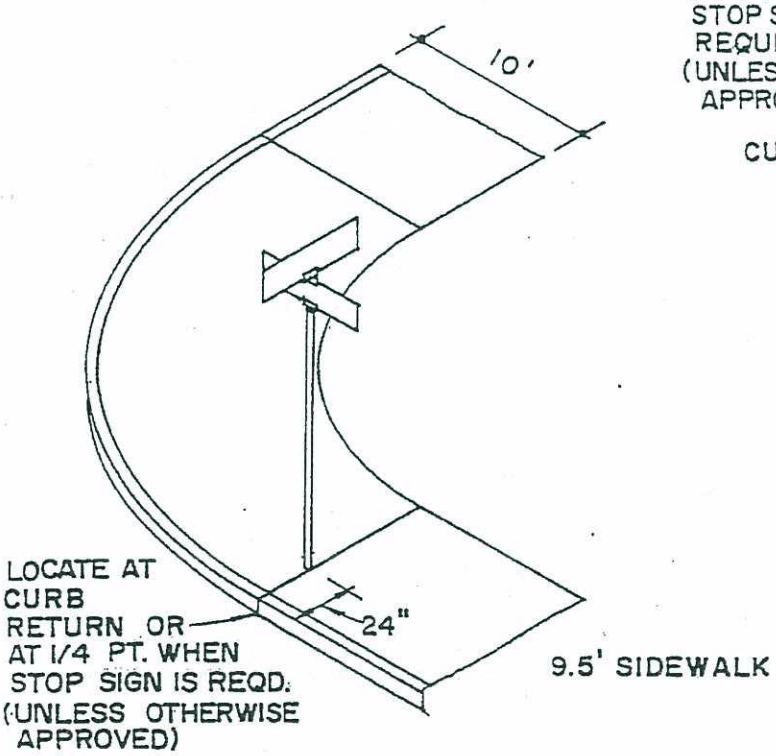

LOCATION IN 9.5 FT. MONOLITHIC SIDEWALK

NO SCALE

NOTES:

1. CORNER FOR INSTALLATION SHALL BE AS DESIGNATED BY THE CITY ENGINEER.
2. JACK HAMMER AT CONSTRUCTION JOINT IF SIGN INSTALLED AFTER SIDEWALK POURED.
3. WHEN POURED IN SIDEWALK, POLES WILL BE SET PRIOR TO SIDEWALK POUR.
4. UTILIZE SAME PIPE FOR STOP SIGN WHERE APPLICABLE

PUBLIC WORKS DEPARTMENT

ENGINEERING SERVICES — CITY OF ANTIOCH, CALIFORNIA

Drawn By: Mayette Date: November 19, 1980 Rev. By: Date: Rev. By: Date:	STANDARD STREET NAME SIGN LOCATIONS CD - 63 b	APPROVED BY: S.E. DAVIS 14298 CITY ENGINEER DATE: 3-2-81

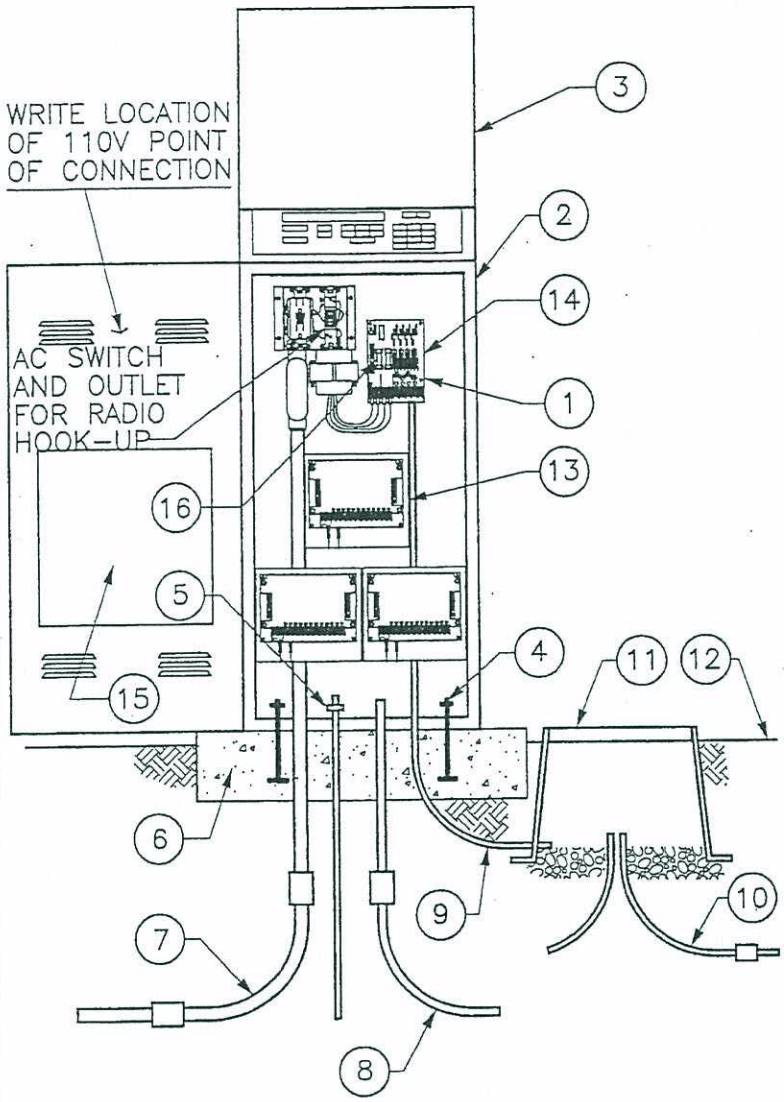

1. AUTOMATIC CONTROLLER, CONTROLLER SHALL BE RAIN MASTER DX2 48 STATION
2. RAINMASTER EVOLUTION DX2 STAINLESS STEEL PEDESTAL CABINET.
3. SLANT TOP LOCKING LID.
4. ANCHOR BOLTS (TYP.)
5. ⅝" DIA. x 8' COPPER – CLAD GROUNDING ROD W/#6 BARE COPPER CONNECTOR.
6. CONCRETE PAD (24"x30"x6") W/ LAMP BLACK COLOR (1 ½" LBS./C. YD.)
7. 120–VOLT POWER SUPPLY IN 1 ½" RIGID STEEL CONDUIT.
8. 2 ½" CONTROL WIRING NMC W/ SWEEP ELBOW.
9. 1" NMC SWEEP ELBOW (PHONE LINE CONDUIT)
10. 2" NMC CONTROL WIRE CONDUIT.
11. CARSON NO. 1419–12B PULL 6" PEA GRAVEL IN THE BOTTOM.
12. FINISH GRADE.
13. TERMINAL STRIP.
14. RADIO CONTROLLER PROVIDED BY THE INSTALLER.
15. PROVIDE REDUCED SCALE, 11 x 17 LAMINATED COLOR CODED LAYOUT OF IRRIGATION SYSTEM – ALL VALVES TO BE IDENTIFIED.
16. CONTRACTOR TO PROVIDE 15 AMP FUSED DISCONN. PER LOCAL LOADS.

NOTE:

CONTRACTOR TO EXTEND CONDUIT & WIRE TO PG.&E SECONDARY BOX PG&E TO MAKE HOOK–UP AFTER INSPECTION.

ENGINEERING SERVICES
CITY OF ANTIOCH

DRAWN BY: S. Rodriguez	PEDESTAL IRRIGATION CONTROLLER	APPROVED BY:
REVISIONS: 5/19/05		J.G. BRANDT CITY ENGINEER
	CD–64A	DATE: 6/7/05

p:\pw standard drawings\cd-64a.dwg

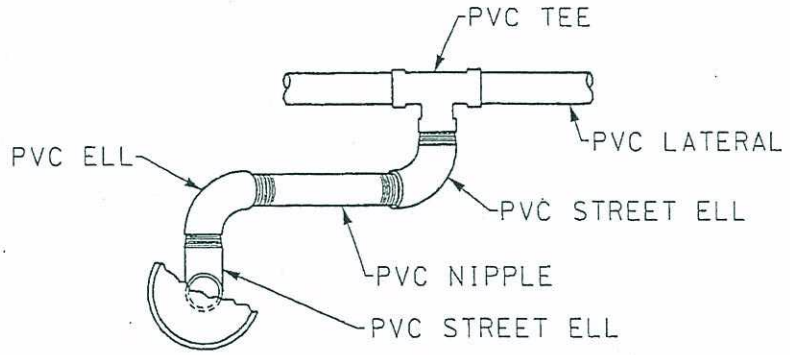

PLAN

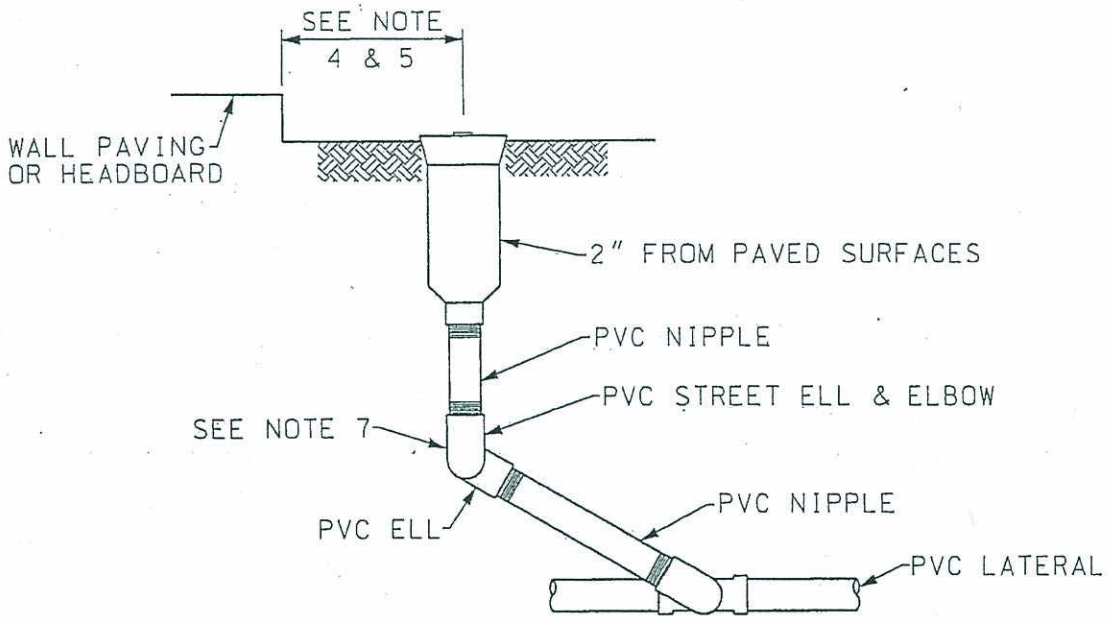

ELEVATION

NOTES:

1. TEFLON TAPE REQUIRED ON ALL THREADED FITTINGS.
2. SPRINKLER HEAD AS APPROVED BY THE CITY ENGINEER.
3. ALL NIPPLES TO BE SCHEDULE 80.
4. PLACE POP-UP SPRAY SPRINKLERS AND BUBBLERS AT 3" MAX. FROM WALLS, PAVING AND HEADBOARD - PLACE LAWN HEADS NO CLOSER THAN 2".
5. PLACE ROTARY SPRINLERS AT 6" MAX. FROM WALLS, PAVING AND HEADBOARD - PLACE LAWN HEADS NO CLOSER THAN 4".
6. LATERAL FITTING FIPT OUTLET, RISER NIPPLES AND FITTINGS SHALL BE THE SAME DIAMETER (IPS) AS SPRINKLER HEAD INLET.
7. FITTING ON LATERAL SIDE CAN BE SCH. 40 OR MARLEX.

DEPARTMENT OF PUBLIC WORKS
ENGINEERING SERVICES CITY OF ANTIOCH

DRAWN BY: MAC	SPRINKLER LATERAL DETAIL CD-64B	APPROVED BY:
REVISIONS:		J.G. BRANDT CITY ENGINEER DATE: 7/2/99

w:/sewers/cd57.dgn

NOTES: 1. TEFLON TAPE REQUIRED ON ALL THREADED FITTINGS.
2. QUICK COUPLER TO BE RAINBIRD 44NP OR APPROVED EQUAL
3. ALL FITTINGS AND NIPPLES TO BE SCHEDULE 80.

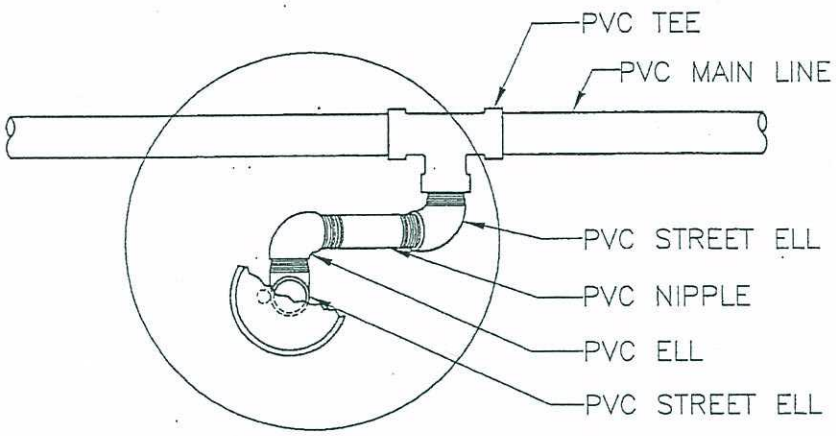

PLAN

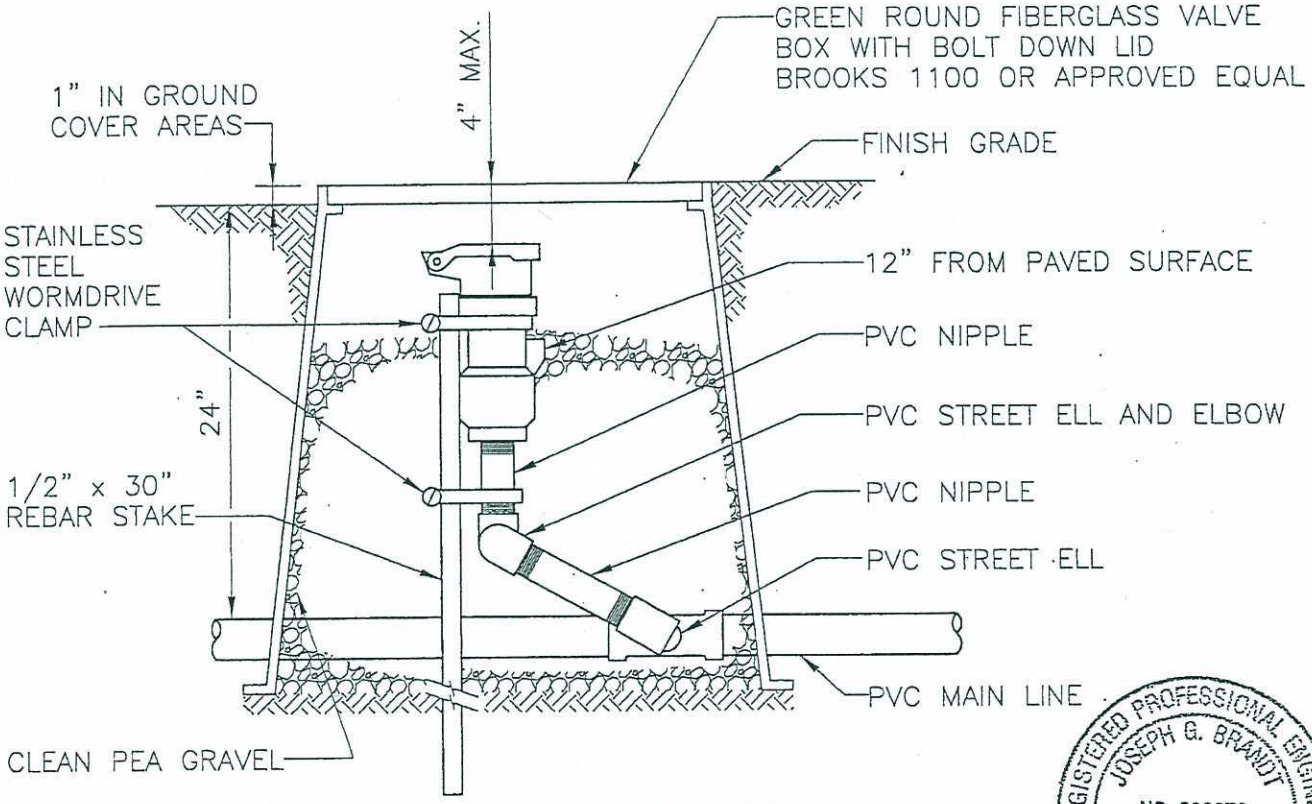

ELEVATION

REGISTERED PROFESSIONAL ENGINEER
JOSEPH G. BRANDT
NO. C26870
EXP. 3/31/09
CIVIL
STATE OF CALIFORNIA

COMMUNITY DEVELOPMENT DEPARTMENT
ENGINEERING SERVICES CITY OF ANTIOCH

DRAWN BY: S. Rodriguez REVISIONS: 9/4/08	QUICK COUPLER MAIN LINE (NON-POTABLE)	APPROVED BY: J.G. BRANDT CITY ENGINEER DATE: 9/9/08
	CD – 64C	

p:\pw standard drawings\cd-64c.dwg

NOTES: 1. TEFLON TAPE REQUIRED ON ALL THREADED FITTINGS.
2. QUICK COUPLER TO BE RAINBIRD 44LRC OR APPROVED EQUAL
3. ALL FITTINGS AND NIPPLES TO BE SCHEDULE 80.

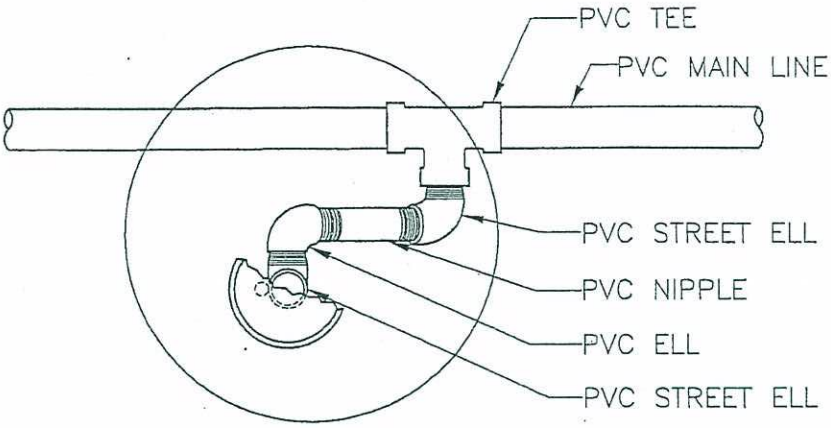

PLAN

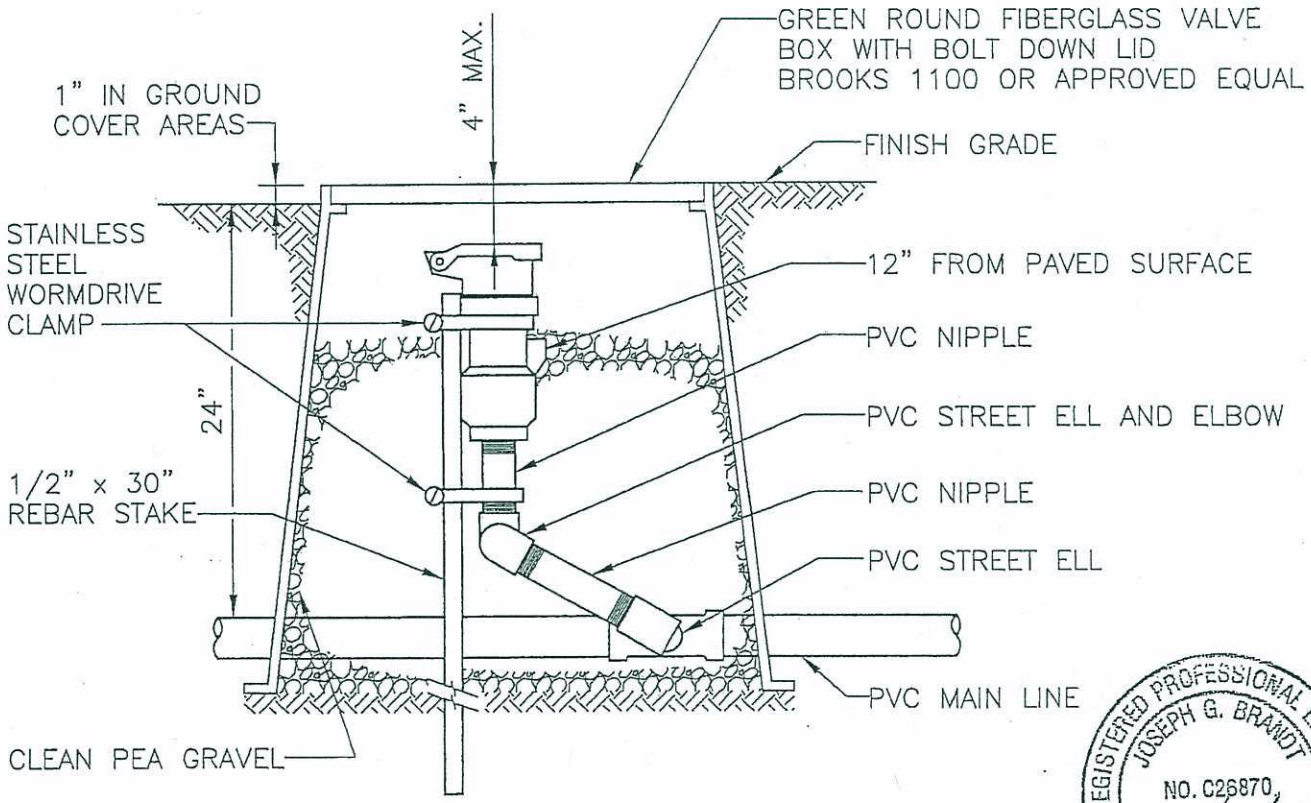

ELEVATION

REGISTERED PROFESSIONAL ENGINEER
JOSEPH G. BRANDT
NO. C26870
EXP. 3/31/09
CIVIL
STATE OF CALIFORNIA

COMMUNITY DEVELOPMENT DEPARTMENT
ENGINEERING SERVICES CITY OF ANTIOCH

DRAWN BY: S. Rodriguez REVISIONS: 9/4/08	QUICK COUPLER MAIN LINE (POTABLE) CD – 64D	APPROVED BY: J.G. BRANDT CITY ENGINEER DATE: 9/9/08

p:\pw standard drawings\cd-64c.dwg

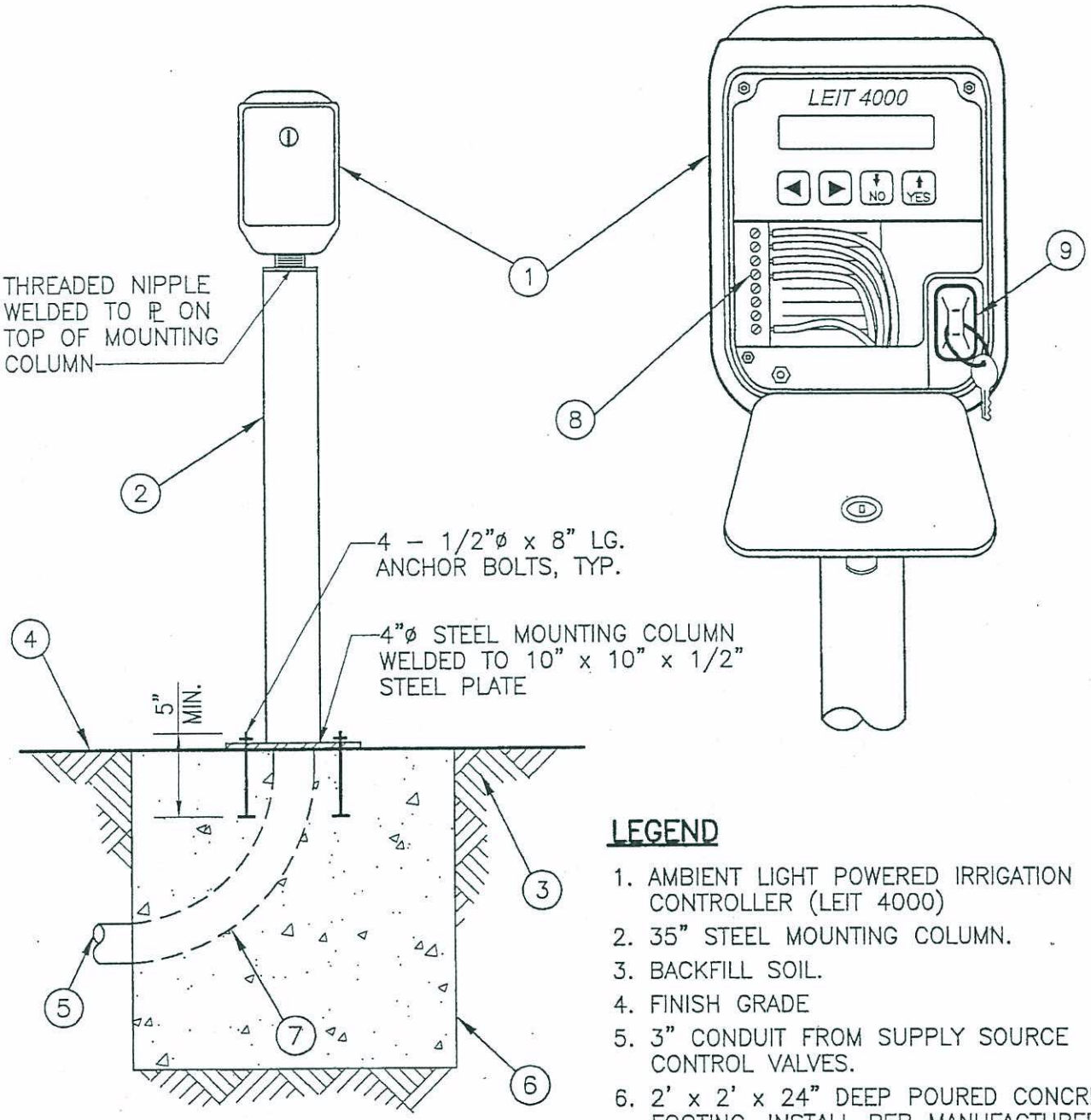

LEGEND

1. AMBIENT LIGHT POWERED IRRIGATION CONTROLLER (LEIT 4000)
2. 35" STEEL MOUNTING COLUMN.
3. BACKFILL SOIL.
4. FINISH GRADE
5. 3" CONDUIT FROM SUPPLY SOURCE CONTROL VALVES.
6. 2' x 2' x 24" DEEP POURED CONCRETE FOOTING, INSTALL PER MANUFACTURER'S INSTALLATION GUIDE.
7. 90° SWEEP ELL.
8. TERMINAL STRIP.
9. PROGRAMMING KEY.

ENGINEERING SERVICES
CITY OF ANTIOCH

DRAWN BY: S. Rodriguez	**LIGHT ENERGIZED IRRIGATION CONTROLER** (CUL–DE–SAC ONLY)	APPROVED BY:
REVISIONS:		J.G. BRANDT CITY ENGINEER
	CD–64E	DATE: 6/7/05

p:\pw standard drawings\CD-XX1.dwg

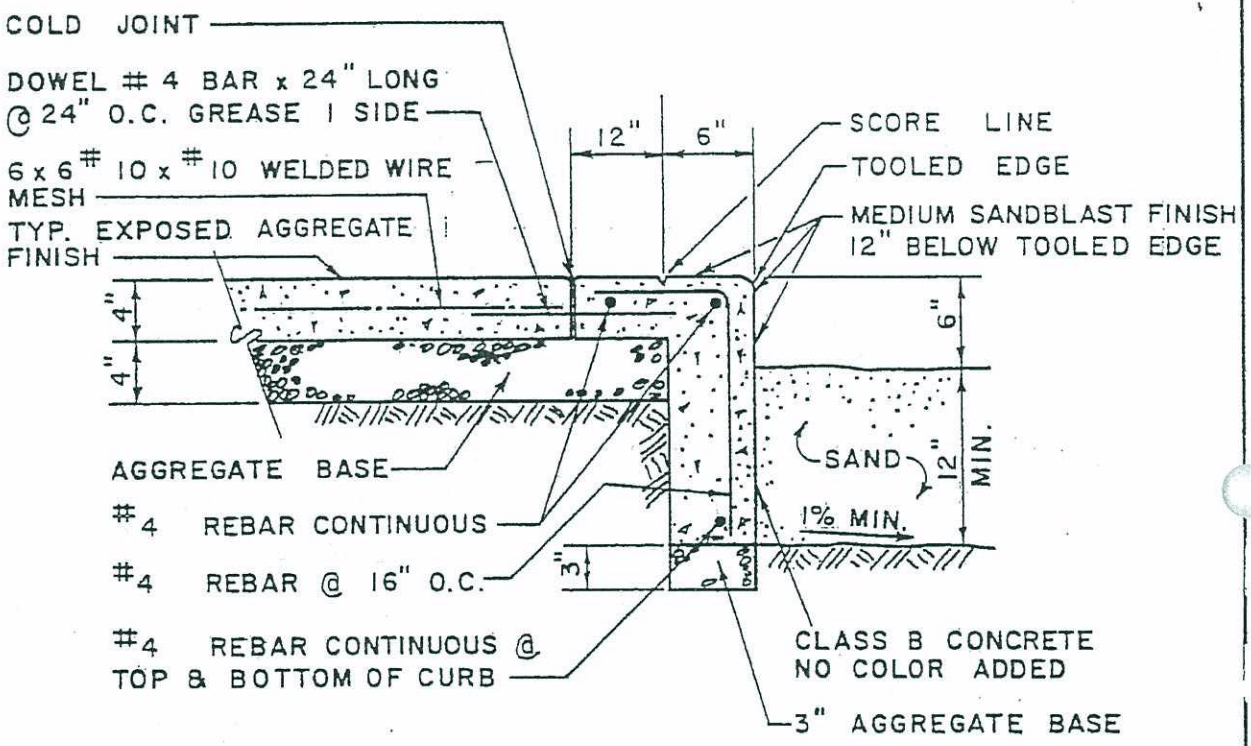

DEPARTMENT OF PUBLIC WORKS

ENGINEERING SERVICES CITY OF ANTIOCH, CALIFORNIA

Drawn by: JV Revised	PLAY AREA CURB SECTION	Approved by: S.E. Davis R.E. 14298 City Engineer Date: 12-13-88
	CD-65	

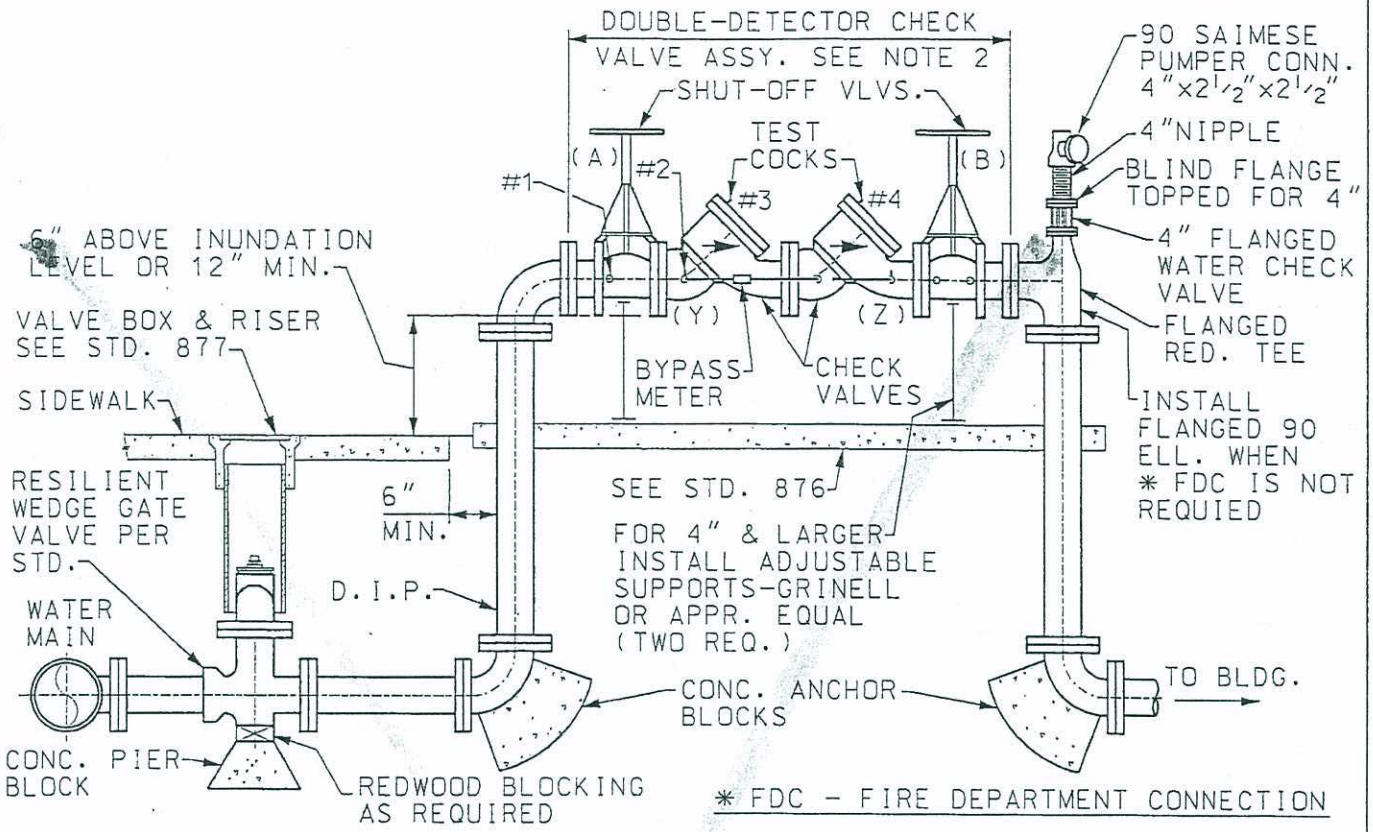

NOTES:

1. DOUBLE-DETECTOR CHECK VALVE BACKFLOW ASSEMBLIES SHALL BE REQUIRED ON ALL PROPERTIES w/ CLASS 1 OR CLASS 2 FIRE SPRINKLER SYSTEMS, AUX. WATER SYSTEMS ON SITE, OR WHERE THE PUBLIC WORKS DEPT. DETERMINES A HAZARD EXISTS.
2. APPROVED DOUBLE-DETECTOR CHECK BACKFLOW ASSEMBLIES SHALL BE AS SHOWN ON CITY OF ANTIOCH LIST OF APPROVED BACKFLOW ASSEMBLIES.
3. ALL RESILIENT VALVES MUST BE CHAINED AND PADLOCKED IN OPEN POSITION.
4. SEE STANDARD FOR CONSTRUCTION NOTES. CD 66
5. DOUBLE-DETCTOR CHECK ASSEMBLY SHALL BE LOCATED AS CLOSE AS POSSIBLE TO THE SIDEWALK OR PUBLIC RIGHT-OF-WAY.
6. ANY COVER OR SCREENING FOR THIS ASSEMBLY MUST HAVE BOTH FIRE DEPT. & PUBLIC WORKS DEPT. APPROVAL PRIOR TO INSTALLATION.
7. SHUT-OF VALVES TO BE RESILIENT WEDGE TYPE O.S. & Y.
8. MUST ALSO MEET U.L. & F.M. APPROVAL.
9. SHOULD NOT BE USED WHERE THERE ARE YARD HYDRANTS AND ADEQUATE FIRE FLOWS CAN NOT BE OBTAINED.
10. DOUBLE-DETECTOR CHECK SHALL BE THE SAME SIZE AS THE FIRE LINE.

DEPARTMENT OF PUBLIC WORKS
ENGINEERING SERVICES CITY OF ANTIOCH

DRAWN BY: MAC REVISIONS:	TYP. INSTALLATION OF 4",6",8" & 10" DOUBLE DETECTOR CHECK FIRE LINE BACKFLOW ASSEMBLY CD-66	APPROVED BY: J.G. BRANDT CITY ENGINEER DATE: 6/17/99

w:/sewers/std2.dgn

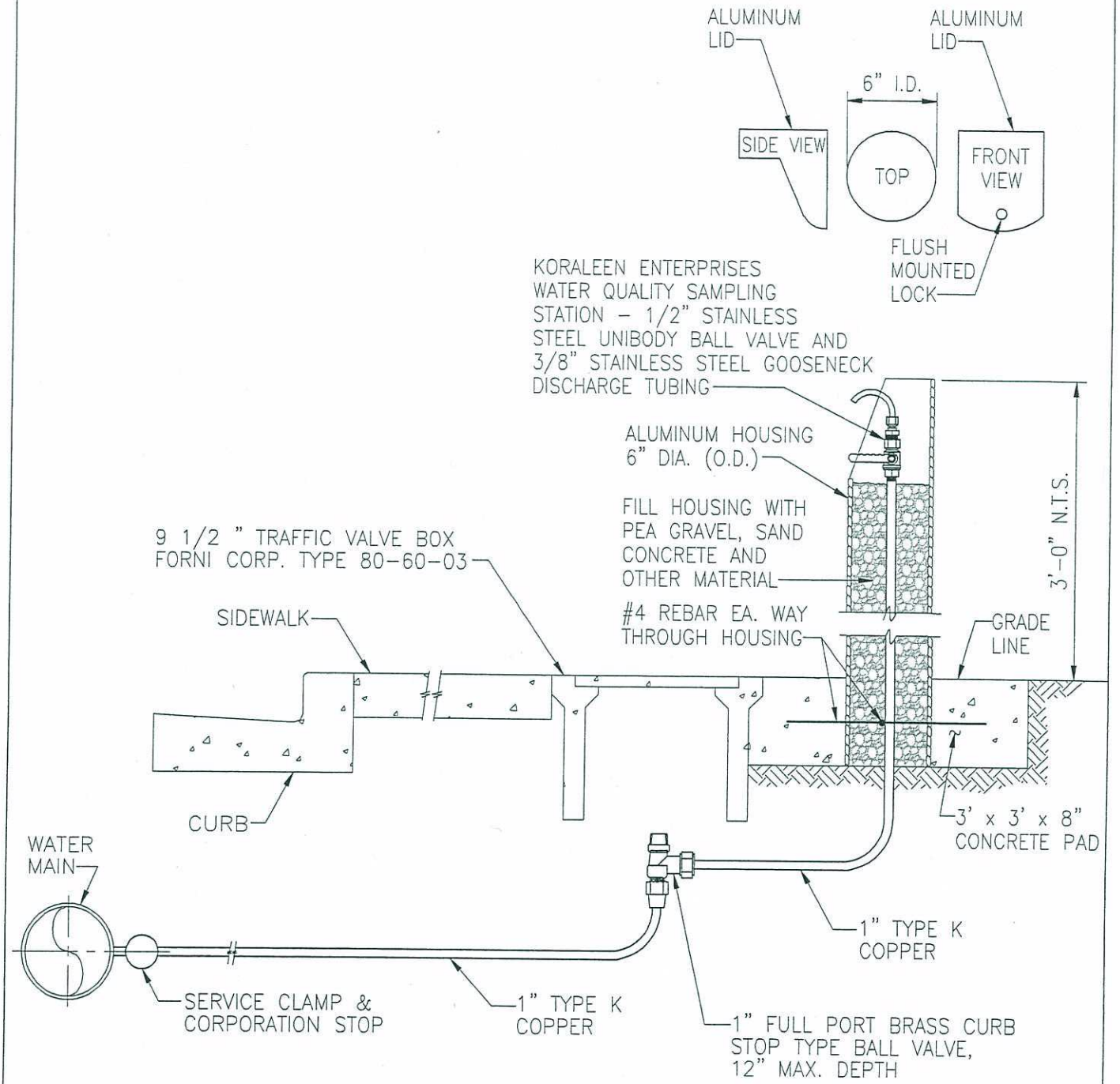

DEPARTMENT OF PUBLIC WORKS
ENGINEERING SERVICES CITY OF ANTIOCH

DRAWN BY: S. Rodriguez	WATER QUALITY SAMPLER	APPROVED BY:
REVISIONS: *REVISED WATER SAMPLING STATION 9/1/10*	CD-67	J.G. BRANDT CITY ENGINEER DATE: 1/26/11

p:\pw standard drawings\cd-67.dwg

WATER SERVICE INSTALLATION POLICY

It is the policy of the City of Antioch to perform all construction work necessary for the tapping of City water mains in service and for the extending of all service laterals to the street right-of-way line in a location mutually acceptable to the customer and the City, with City forces.

A deposit for the cost of each installation shall be paid in advance by the customer, in addition to the various fees required for service, by posting a deposit based on a cost estimate prepared by Engineering Services. All City work will be done on a time and material basis charged against this deposit.

New subdivision areas or other large developments including installation of water mains may be allowed to tap mains and run laterals by a qualified, licensed contractor in accordance with an agreement or other prior City approval of such work.

In any case, the contractor shall not turn any valves affecting water service customers in the operational water system. City forces will control all valves for approved work on the City water system. All work shall be done in a manner to minimize the inconvenience to water customers.

DEPARTMENT OF PUBLIC WORKS
ENGINEERING SERVICES CITY OF ANTIOCH CALIFORNIA

Drawn by: JV Revised	WATER SERVICE INSTALLATION POLICY	Approved by: S.E. Davis S.E. Davis R.E. 14298 City Engineer Exp 3-31-9 Date: Jan. 6, 1994
	CD-69	

SEWER SERVICE INSTALLATION POLICY

It is the policy of the City of Antioch to regulate all construction work necessary for the tapping of City sewer mains in service and for the extending of all service laterals to the street right-of-way line in a location mutually acceptable to the customer and the City, with private Licensed contractors.

The encroachment permit cost of each installation shall be paid in advance by the customer or licensed contractor, in addition to the various fees required for service, by posting a deposit based on a cost estimate prepared by Engineering Services.

New subdivision areas or other large developments which include installation of sewer mains will be allowed to tap mains and run laterals by a qualified, licensed contractor in accordance with the subdivision agreement or other prior City approval of such work.

In any case, the contractor shall not disconnect any pipes affecting sewer services to customers in the operational sewer system without prior City approval and notice to customers. All work shall be done in a manner to minimize the inconvenience to sewer customers and public traffic.

REGISTERED PROFESSIONAL ENGINEER
STANFORD E. DAVIS
No. 14298
CIVIL
STATE OF CALIFORNIA

DEPARTMENT OF PUBLIC WORKS
ENGINEERING SERVICES CITY OF ANTIOCH CALIFORNIA

Drawn by: JV Revised	SEWER SERVICE INSTALLATION POLICY CD-70	Approved by: S. E. Davis R.E. 14298 City Engineer Exp. 3-31-9 Date: 7-7-94

NOTES:

1. DEPENDENT ON SOIL ANALYSIS. BACKFILL MIX, AGRIFORM TABLETS,
2. PLANTING PIT DIMENSIONS TWICE THE DIAMETER OF CONTAINER.

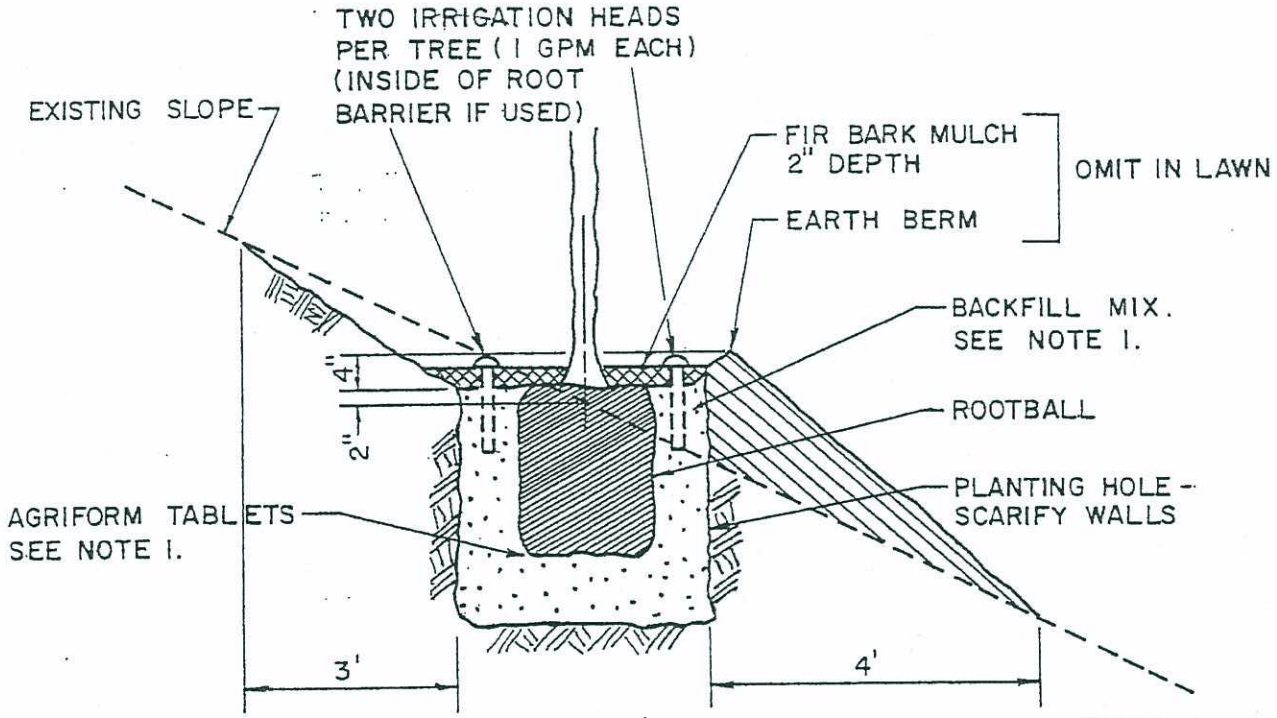

REGISTERED PROFESSIONAL ENGINEER
STANFORD E. DAVIS
No. 14298
Exp 3-31-97
CIVIL
STATE OF CALIFORNIA

DEPARTMENT OF PUBLIC WORKS
ENGINEERING SERVICES CITY OF ANTIOCH CALIFORNIA

Drawn by: JV Revised	SHRUB & TREE PLANTING ON SLOPE CD-71	Approved by: S. E. Davis R.E. 14298 City Engineer ucExp. 3-31-97 Date: 8-2-94

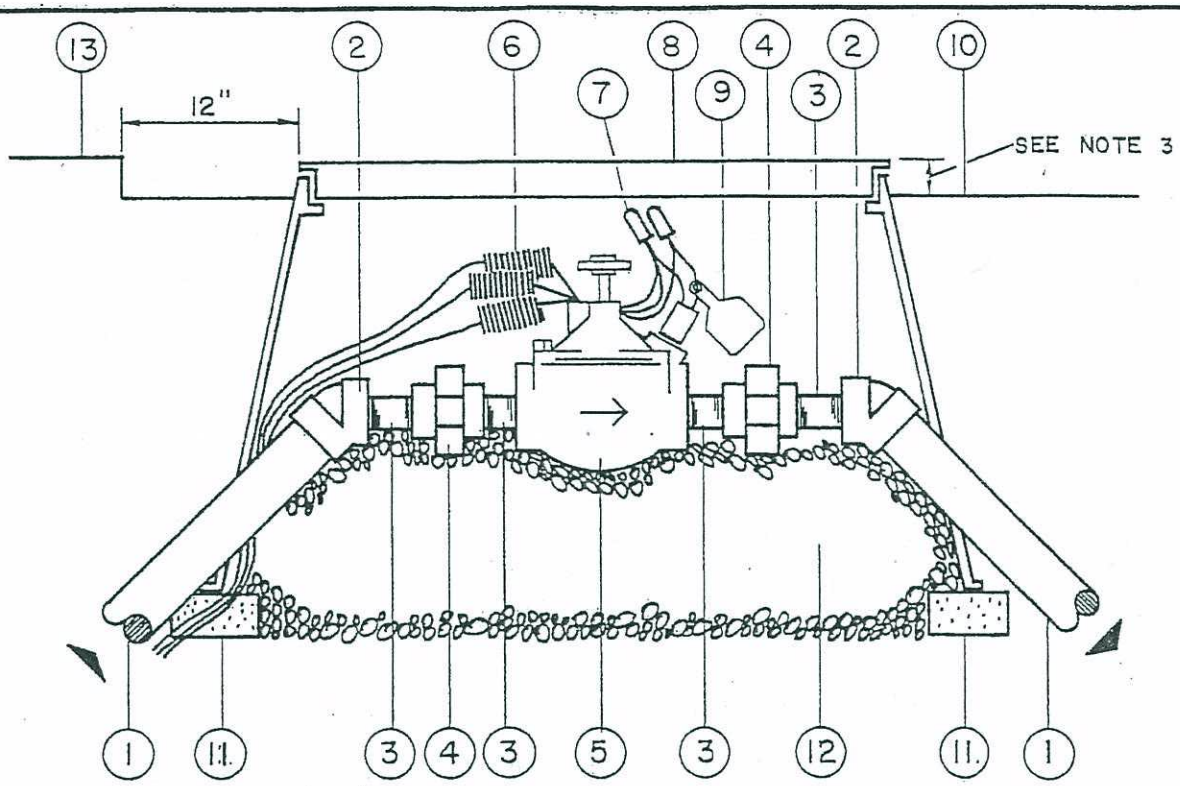

1. IRRIGATION MAINLINE.
2. SCH. 80 PVC 45° ELBOW (S x S) WITH REDUCER BUSHING (S x T).
3. SCH. 80 PVC NIPPLE (T.B.E.) 3" LENGTH.
4. SCH. 80 PVC UNION (T x T).
5. MASTER CONTROL VALVE SUPERIOR 3100.
6. CONTROL WIRING - 24 - INCHES COIL OF EACH.
7. SPLICE KIT: 3M 'DBY', SNAP TITE, PEN TITE.
8. VALVE BOX: BROOKS NO. 1419 W/ BOLT-DOWN 'T' COVER. COLOR GREEN. HEAT BRAND VALVE# ON LID
9. BRASS VALVE TAG.
10. FINISH GRADE.
11. 1- COMMON BRICK AT EACH CORNER.
12. 1/4" CLEAN PEA GRAVEL TO FULLY SUPPORT COMPLETE VALVE ASSEMBLY (MIN. 2 CU. FT.)
13. EDGE OF PAVING, HEADERBOARD.

NOTES:

1. NIPPLES AND UNIONS TO BE SAME DIAMETER SIZE (IPS) AS THE MASTER CONTROL VALVE. ALL OTHER FITTINGS TO BE SAME SIZE. AS THE MAINLINE.
2. EXTEND INLET AND DISCHARGE PIPING TO SPECIFIED MAINLINE DEPTH. MAKE TRANSITIONS INTO MAINLINE PIPE RUN WITH 45° ELBOWS.
3. SET TOP OF BOX AT 3/4" ABOVE FINISH GRADE IN TURF AREA. IN NON-TURF AREAS SET TOP OF BOX TO TOP OF MULCH.

REGISTERED PROFESSIONAL ENGINEER STANFORD E. DAVIS No. 14298 EXP 3-31-97 CIVIL STATE OF CALIFORNIA

DEPARTMENT OF PUBLIC WORKS
ENGINEERING SERVICES CITY OF ANTIOCH CALIFORNIA

Drawn by: JV Revised	MASTER CONTROL VALVE	Approved by: S. E. Davis R.E. 14298 City Engineer Date: 8-2-94
	CD - 72	

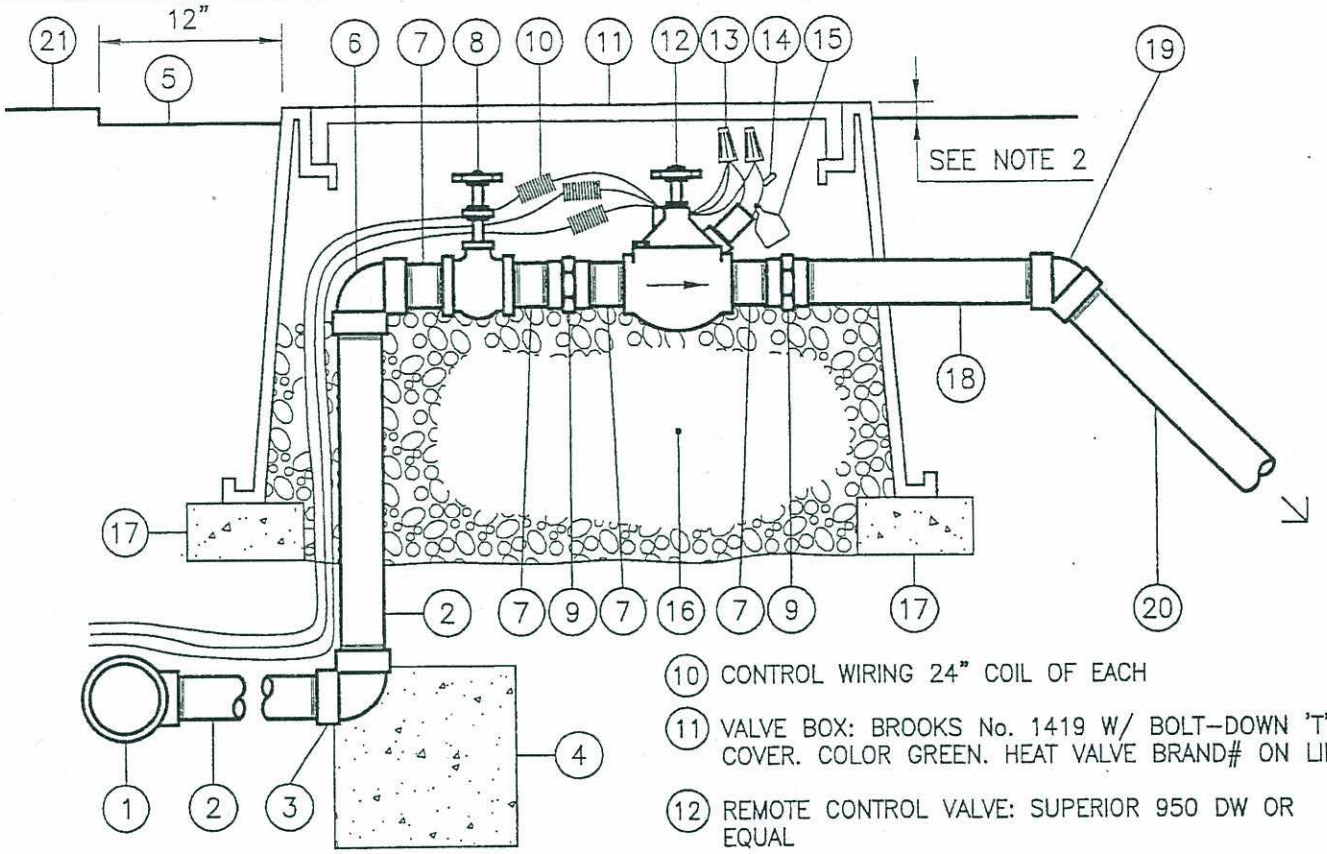

1. MAIN LINE FITTING (S x S x T)
2. SCH. 80 PIPE. LENGTH AS REQUIRED
3. SCH. 80 PVC 90° ELBOW (T x T)
4. CONCRETE THRUST BLOCK. 1 CU. FT.
5. FINISH GRADE
6. SCH. 80 PVC 90° ELBOW (T x T)
7. SCH. 80 PVC NIPPLE MIN. LENGTH 2"
8. SHUT-OFF VALVE: NIBCO T-113 W/ WHEEL HANDLE
9. SCH. 80 PVC UNION (T x T)
10. CONTROL WIRING 24" COIL OF EACH
11. VALVE BOX: BROOKS No. 1419 W/ BOLT-DOWN 'T' COVER. COLOR GREEN. HEAT VALVE BRAND# ON LID
12. REMOTE CONTROL VALVE: SUPERIOR 950 DW OR EQUAL
13. SPLICE KIT: 3M 'BY', SNAP TITE, PEN TITE
14. WIRE LABEL W/ VALVE NUMBER CODE
15. BRASS VALVE TAG
16. 1/4" CLEAN PEA GRAVEL TO FULLY SUPPORT VALVE (MIN. 2 CU. FT.)
17. 1 COMMON BRICK AT EA. CORNER
18. SCH. 80 PVC NIPPLE 12" LENGTH
19. SCH. 80 PVC 45° ELBOW – ONE OF TWO
20. REQUIRED TO TRANSITION TO LATERAL DEPTH LATERAL PIPE
21. EDGE OF PAVING, HEADERBOARD

NOTES:

1. MANIFOLD PIPING, FITTINGS, NIPPLES AND SHUT-OFF VALVE TO BE SAME DIAMETER SIZE (IPS) AS REMOTE CONTROL VALVE.
2. SET TOP OF BOX AT 3/4" ABOVE FINISH GRADE IN TURF AREA. IN NON-TURF AREAS SET TOP OF BOX TO TOP OF MULCH.
3. ALL TEES AND FITTINGS ON MAIN LINE SIDE ARE TO BE SHEDULE 80.

DEPARTMENT OF PUBLIC WORKS
ENGINEERING SERVICES CITY OF ANTIOCH

DRAWN BY: S. Rodriguez REVISIONS: REVISED CALLOUT 1 AND 2, ADDED NOTE 3 (2-28-05)	REMOTE CONTROL VALVE CD-73	APPROVED BY: J.G. BRANDT CITY ENGINEER DATE: 2/28/05

p:\pw standard drawings\cd-73.dwg

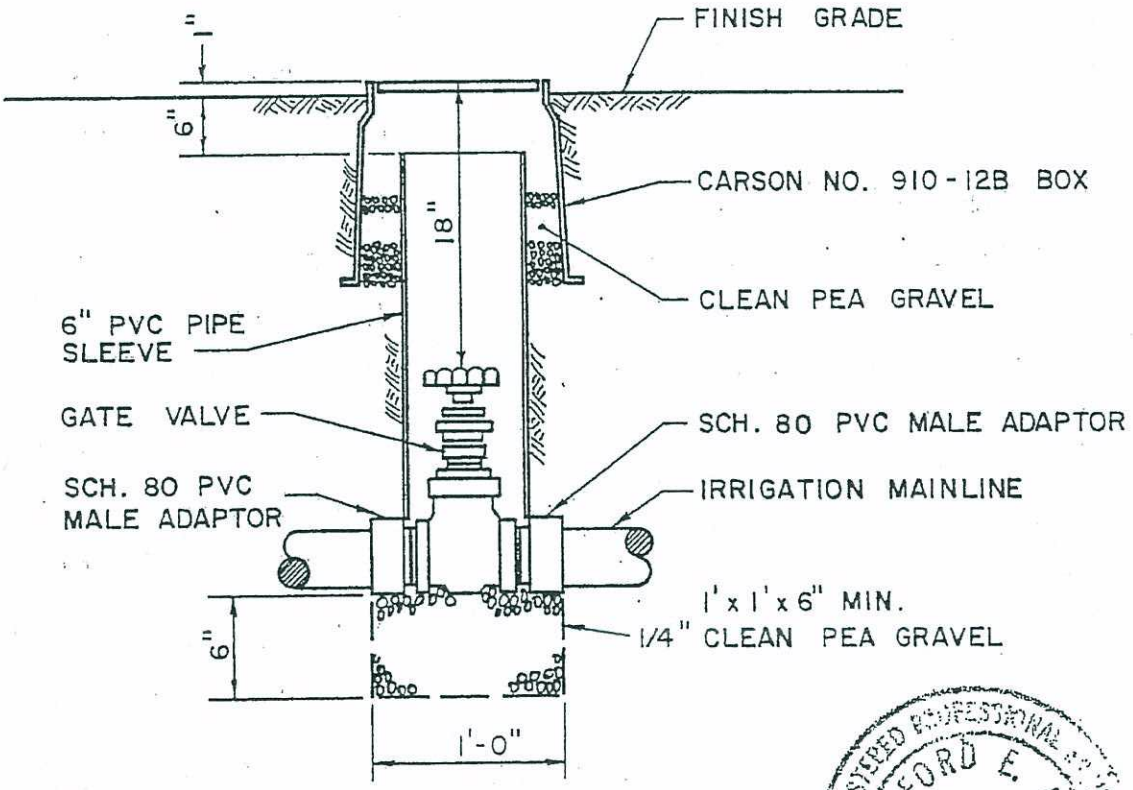

REGISTERED PROFESSIONAL ENGINEER
STANFORD E. DAVIS
No. 14298
Exp 3-31-97
CIVIL
STATE OF CALIFORNIA

DEPARTMENT OF PUBLIC WORKS
ENGINEERING SERVICES CITY OF ANTIOCH CALIFORNIA

Drawn by: JV Revised	ISOLATION GATE VALVE - 2" & UNDER	Approved by: S. E. Davis R.E. 14298 City Engineer Date: 8-2-94
	CD - 74	

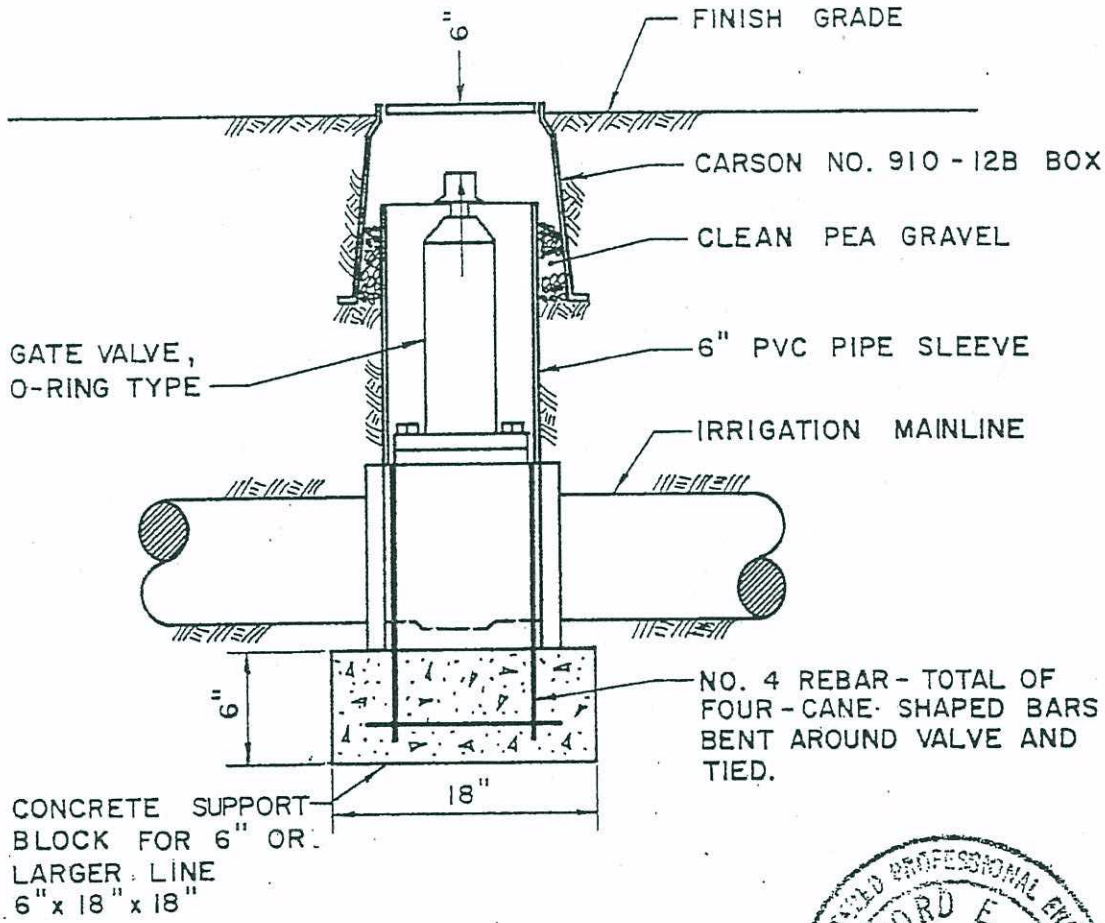

REGISTERED PROFESSIONAL ENGINEER
STANFORD E. DAVIS
No. 14298
Exp 3-31-97
CIVIL
STATE OF CALIFORNIA

DEPARTMENT OF PUBLIC WORKS
ENGINEERING SERVICES CITY OF ANTIOCH CALIFORNIA

Drawn by: JV Revised	ISOLATION GATE VALVE - 2½" & OVER	Approved by: S. E. Davis R.E. 14298 City Engineer Date: 8-8-94
	CD - 75	

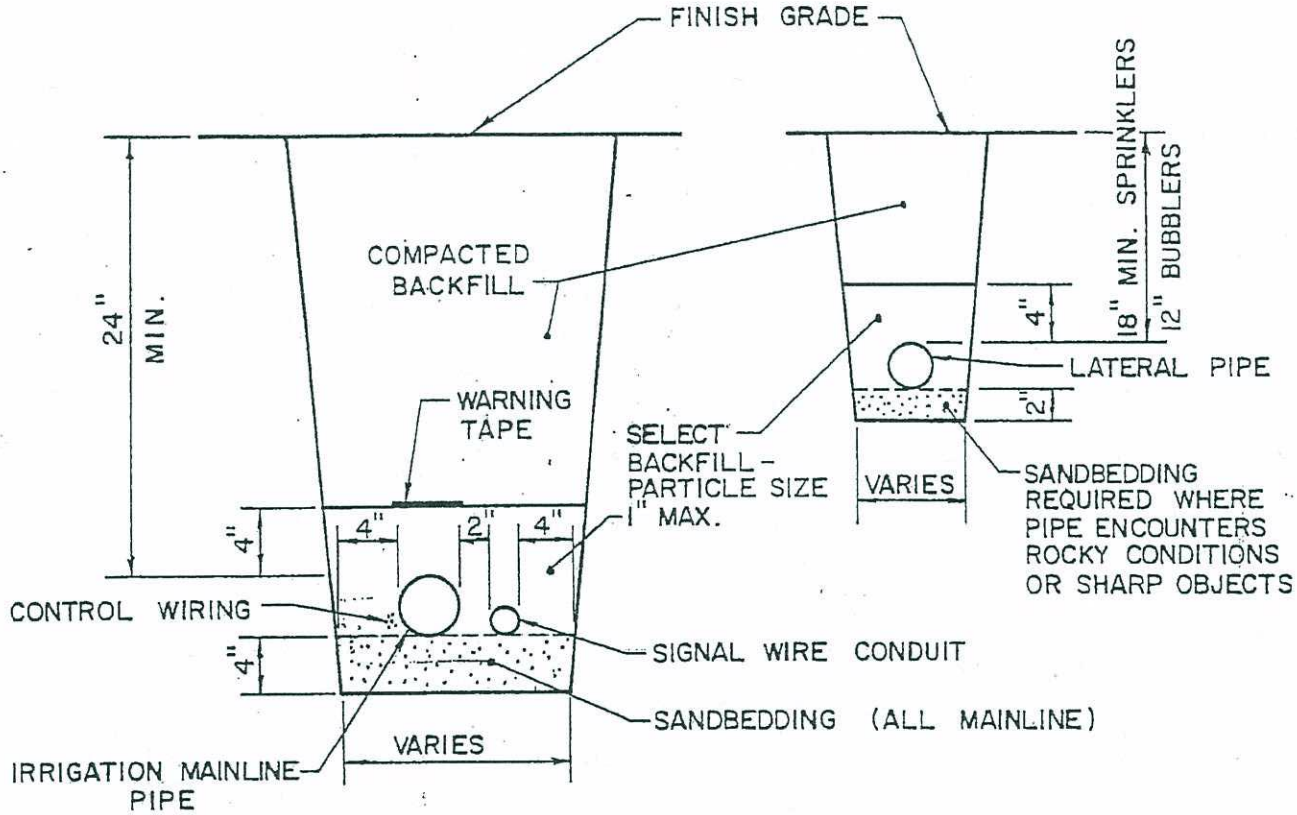

NOTES:

1. TRENCH WIDTH TO ALLOW FOR SNAKING OF PIPE(S).
2. TAPE CONTROL WIRING AT 10' INTERVALS. LEAVE 24" SLACK AT ALL CHANGES OF DIRECTION.

REGISTERED PROFESSIONAL ENGINEER
STANFORD E. DAVIS
No. 14298
Exp 3-31-97
CIVIL
STATE OF CALIFORNIA

DEPARTMENT OF PUBLIC WORKS
ENGINEERING SERVICES CITY OF ANTIOCH CALIFORNIA

Drawn by: JV Revised	TRENCH SECTIONS FOR IRRIGATION PIPE	Approved by: S. E. Davis S. E. Davis R.E. 14298 City Engineer Date: 8-2-94
	CD-76	

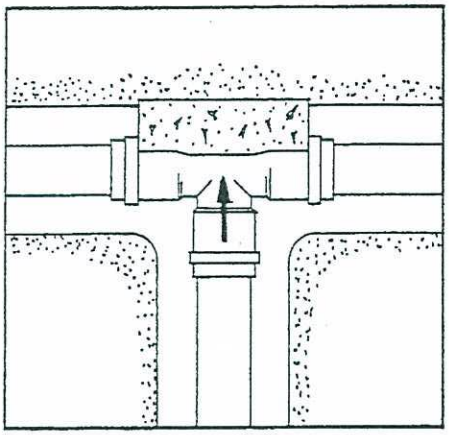

THRU LINE CONNECTION, TEE

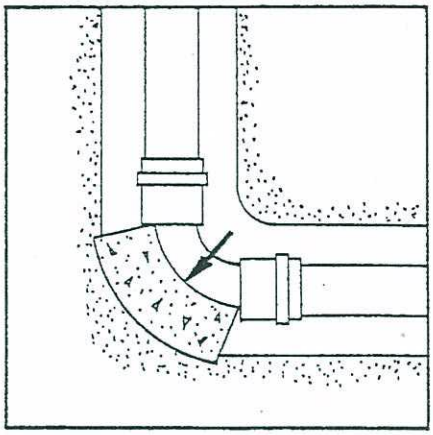

DIRECTION CHANGE, ELBOW

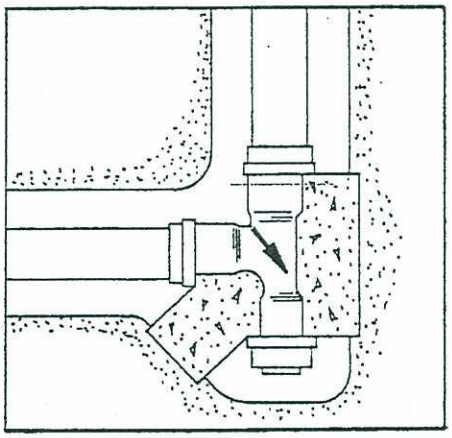

DIRECTION CHANGE, TEE USED AS ELBOW

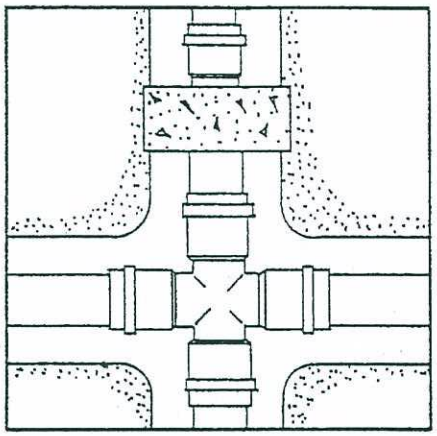

CHANGE LINE SIZE, REDUCER

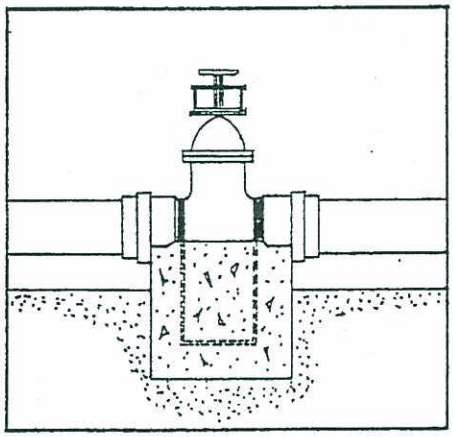

VALVE ANCHOR

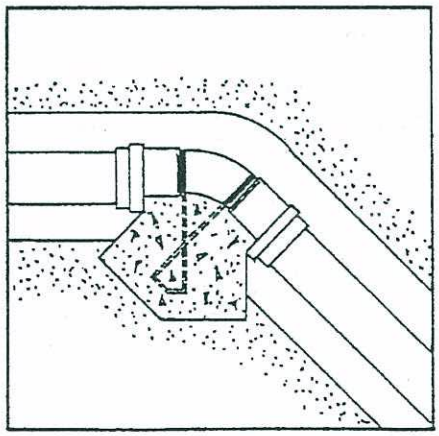

DIRECTION CHANGE VERTICAL BEND ANCHOR

DEPARTMENT OF PUBLIC WORKS

ENGINEERING SERVICES CITY OF ANTIOCH CALIFORNIA

Drawn by: JV Revised	TYPICAL THRUST BLOCK INSTALLATIONS FOR IRRIGATION ONLY	Approved by: S. E. Davis R.E. 14298 City Engineer Date: 8-2-94
	CD - 77	

REGISTERED PROFESSIONAL ENGINEER
STANFORD E. DAVIS
No. 14298
Exp 3-31-97
CIVIL
STATE OF CALIFORNIA

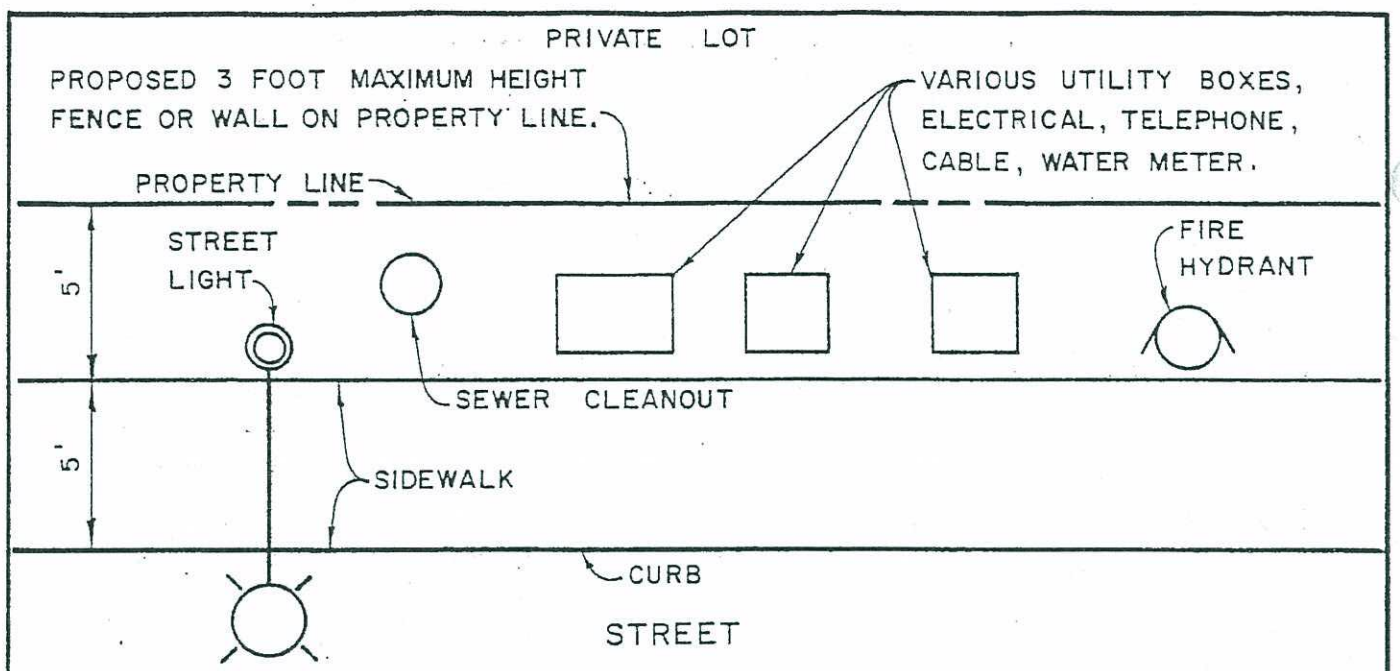

TYPICAL RESIDENTIAL FRONTAGE

ANTIOCH MUNICIPAL CODE 6-5.25
7-2.0 THROUGH 7-2.7

All fences or walls shall be on or behind property line. Some fences or walls may be within the five foot area behind sidewalk, if an encroachment agreement is approved by the City Council. Removal and/or repair of any private improvements allowed within five feet of the sidewalk is at the expense of the permittee or property owner. Any digging within the five foot strip behind sidewalk requires notification of U.S.A. Underground Service Alert, (800) 227-2600, 48 hours in advance of work by state law. All utility boxes, fire hydrants, street lights and cleanouts must be directly accessable to the sidewalk.

Box clearance, shall be 24 inches on all sides, fire hydrant clearance shall be 36 inches on all sides. All shrubs shall be trimmed accordingly. No trees are permitted within five feet behind any sidewalk. Overhanging trees or shrubs must be trimmed to clear 8 feet in height above sidewalk and utilities. Walls, fences and shrubs are limited to 3 feet in height in front and side yards. (AMC Sec 9-5.503.2(a) & AMC 9-5.503.1)

DEPARTMENT OF PUBLIC WORKS
ENGINEERING SERVICES CITY OF ANTIOCH, CALIFORNIA

Drawn by: JV Revised	UTILITY CLEARANCE POLICY	Approved by: S. E. Davis R.E. 14298 City Engineer Exp 3-31-97 Date: 9-27-95
	CD-78	

ANTIOCH MUNICIPAL CODE

SECTION 6-5.25 OBSTRUCTION OF HYDRANTS, WATER METERS OR OTHER WATER SERVICE EQUIPMENT

No person shall place, plant or construct any object, shrubbery, fence or wall which encroaches on the clear setback zone of any hydrant, water meter or other water service equipment connected to the water pipes of the water department.

a. Hydrants require a minimum un-obstructed three (3') foot clear setback zone, at least eight feet (8') high, completely around each hydrant.

b. Water meters require a minimum un-obstructed twenty-four (24") inch clear setback zone, at least eight (8') feet high, completely around each water meter box.

   (1) The twenty-four (24") inch clear setback zone required for water meters shall be measured from the outside edge of the water meter box.

   (2) No obstruction of any kind shall be permitted between the water meter box and the public sidewalk.

c. Water gates and other water service equipment require a minimum un-obstructed twenty-four (24") inch clear setback zone, at least eight (8') feet high, completely around each piece of equipment.

GENERAL INFORMATION

In most areas of the City there is a five (5') foot right-of-way behind the public sidewalk. This is a required City right-of-way for the installation and relocation of public utilities. Generally, if your water meter is located behind the public sidewalk, then the five (5') foot right-of-way applies to your property. Prior to the construction of any structure (including fencing or walls) within the right-of-way, the property owner must obtain an "City Encroachment Agreement." Fencing, walls or other structures, require a Building Permit, as well.

Applications for an Encroachment Agreement are obtained from Engineering Services, Department of Community Development, (Telephone: 510/779-7035), Building Permits are issued by Building Services (Telephone: 510/779-7065). Both are located in the Antioch City Hall, Third and "H" Streets on the Second Floor.

If you have any questions concerning the "Clear Setback Zone" of water meters or hydrants, you may contact Water Division Supervisor, Mr. Sal Romo at telephone number 510/779-6962.

WBD/gj

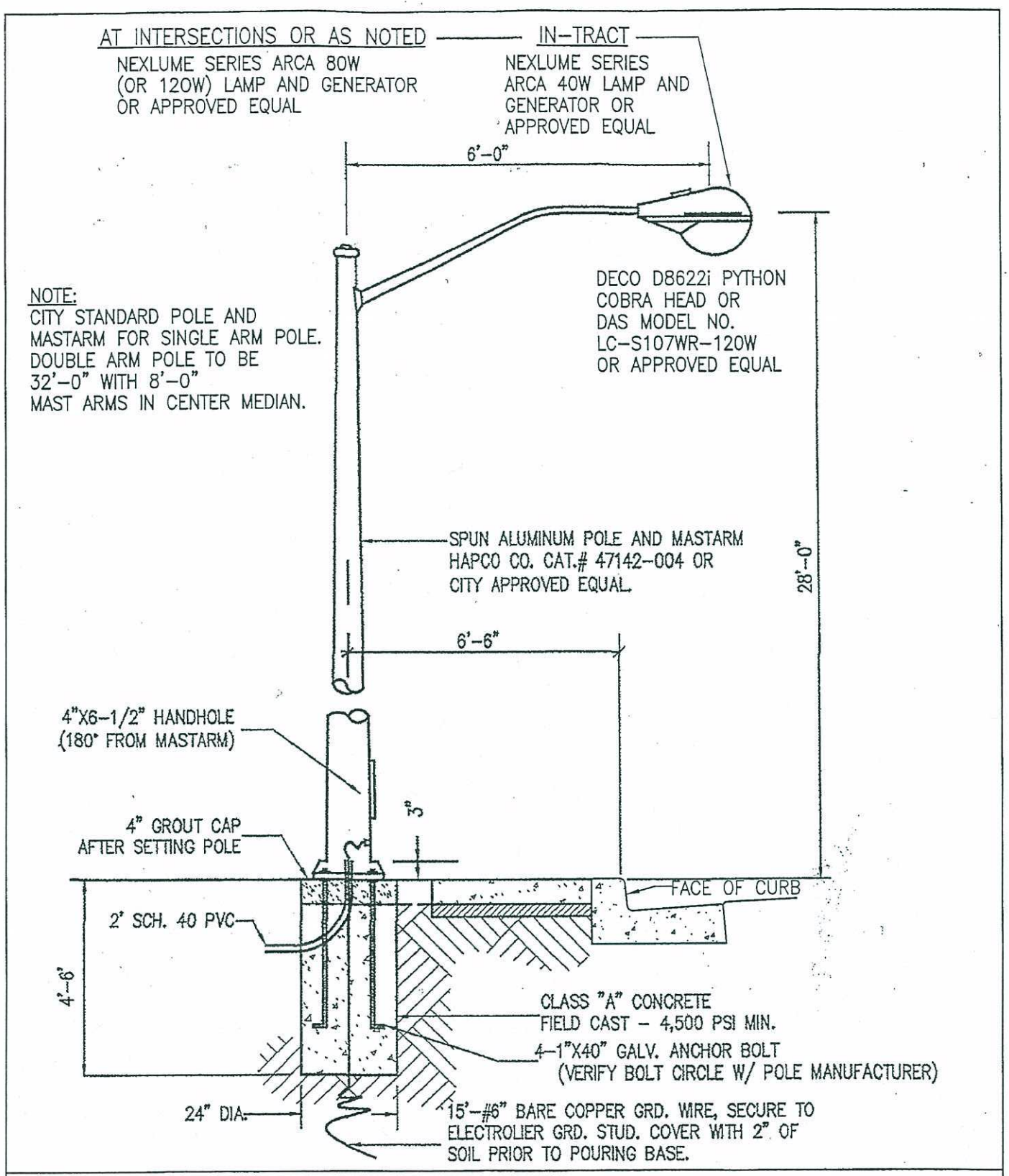

ENGINEERING SERVICES
CITY OF ANTIOCH

DRAWN BY: S. Rodriguez REVISIONS: REVISED LAMP AND LIGHT FIXTURE ON SHEET 1 OF 2 2/2/2010	ELECTROLIER DETAIL 1 of 2 CD-79	APPROVED BY: J.C. BRANDT CITY ENGINEER DATE: 2/3/10

p:\pw standard drawings\cd-79.dwg

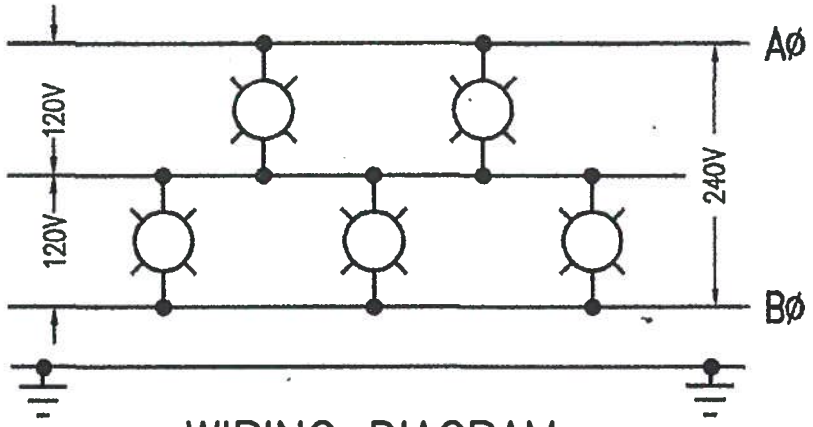

WIRING DIAGRAM

NOT TO SCALE

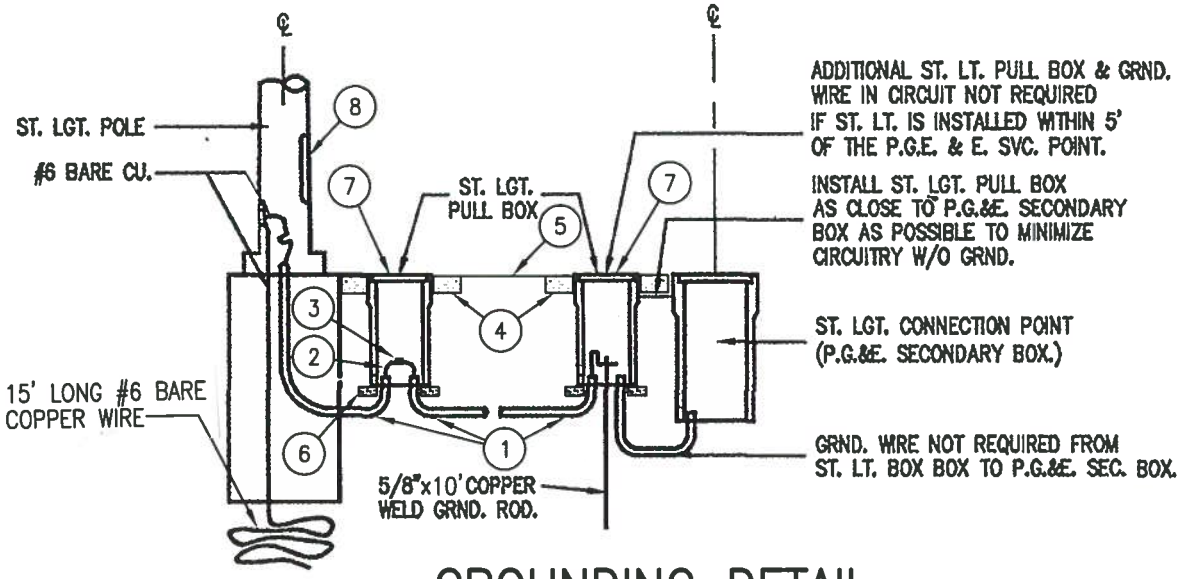

GROUNDING DETAIL

NOT TO SCALE

1. 2" PVC CONDUIT SCHEDULE 40
2. COPPER WIRE #6
3. WATER TIGHT CONNECTORS
4. CONCRETE PAD 1' WIDE 6" DEEP MIN. AROUND ALL SIDES OF PULL BOXES TO FINISH GRADE
5. FINISH GRADE
6. 1 BRICK AT EA. CORNER OF BOXES
7. LOCKJAW UTILITY BOX SECURITY LID (SIPRA CORPORATION)
8. INSTALL FUSE HOLDER IN POLE, AT HAND HOLE

NOTES:

1. FUSE HOLDER INSTALLED IN POLE, AT HAND HOLE.
2. CONDUITS TO BE SEALED AT ENDS.
3. LOCKJAW UTILITY BOX SECURITY LID (SIPRA CORPORATION)
   ELJ 09 – FITS CHRISTY – N09, ELJ 16 – FITS CHRISTY – N16,
   ELJ 30 – FITS CHRISTY – N30

ENGINEERING SERVICES
CITY OF ANTIOCH

DRAWN BY: S. Rodriguez	ELECTROLIER DETAIL	APPROVED BY: Ron Bernal
REVISIONS: REVISED SHEET 2 OF 2 7/1/2013	2 of 2	RON BERNAL CITY ENGINEER
	CD–79	DATE: 7/1/13

p:\pw standard drawings\cd-79.dwg